MDOT Regions and Transportation Service Centers

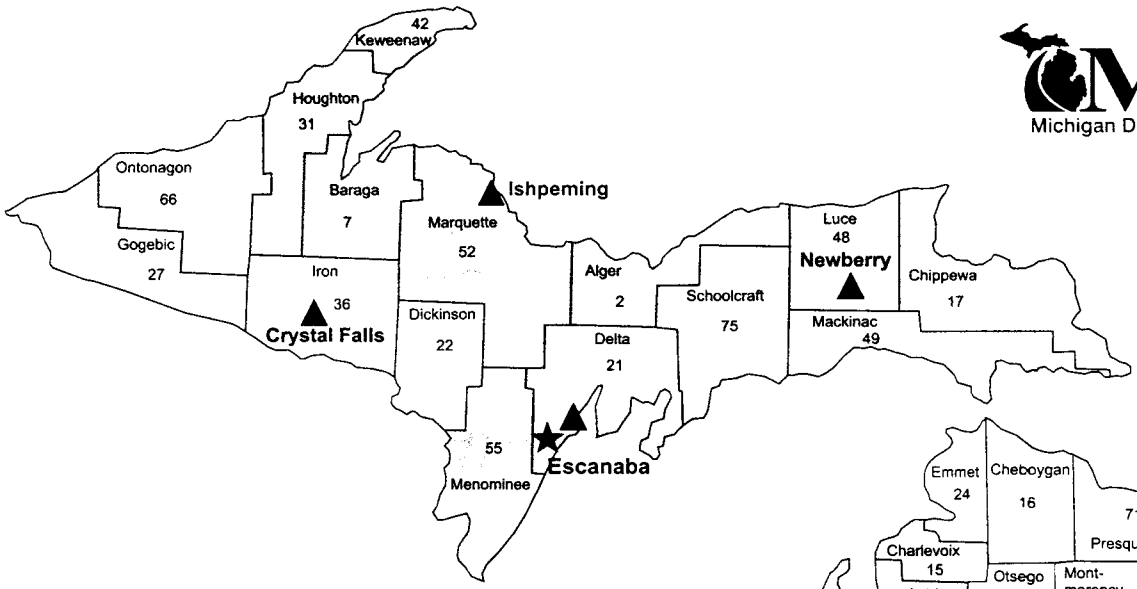

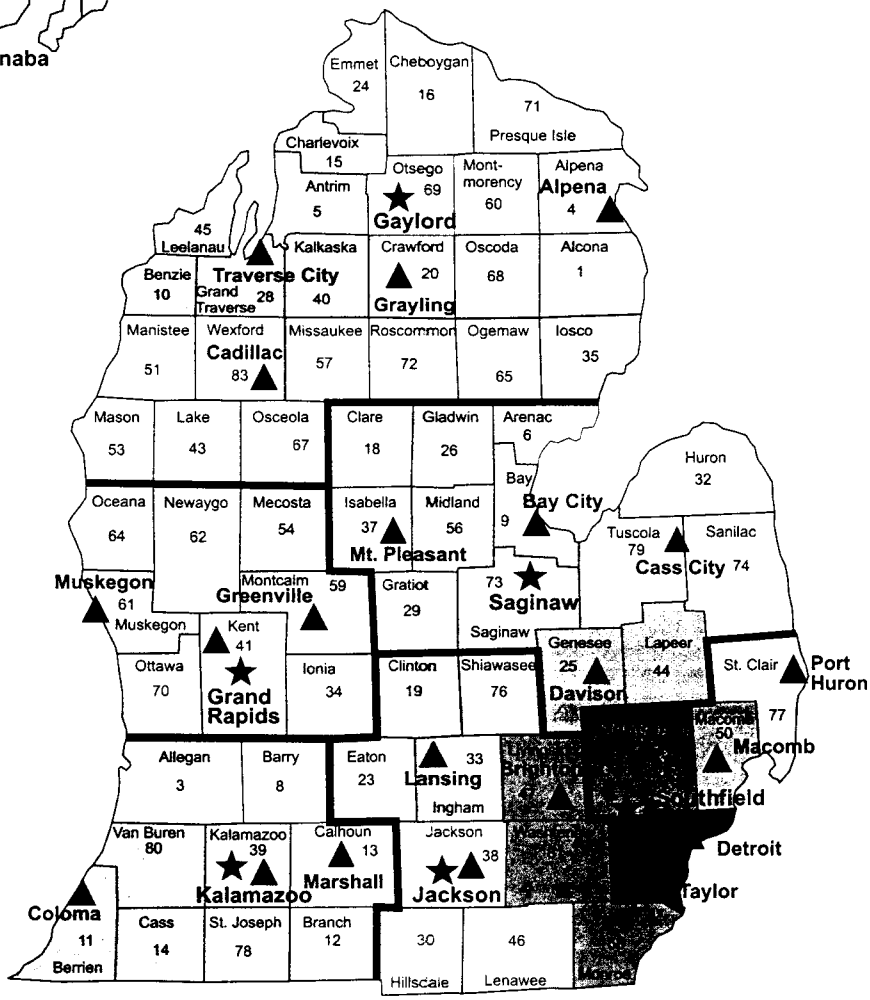

COUNTIES

		REGION			REGION
1.	ALCONA	NOR	43.	LAKE	NOR
2.	ALGER	SUP	44.	LAPEER	BAY
3.	ALLEGAN	SWR	45.	LEELANAU	NOR
4.	ALPENA	NOR	46.	LENEWEE	UNIV
5.	ANTRIM	NOR	47.	LIVINGSTON	UNIV
6.	ARENAC	BAY	48.	LUCE	SUP
7.	BARAGA	SUP	49.	MACKINAC	SUP
8.	BARRY	SWR	50.	MACOMB	METRO
9.	BAY	BAY	51.	MANISTEE	NOR
10.	BENZIE	NOR	52.	MARQUETTE	SUP
11.	BERRIEN	SWR	53.	MASON	NOR
12.	BRANCH	SWR	54.	MECOSTA	GR
13.	CALHOUN	SWR	55.	MENOMINEE	SUP
14.	CASS	SWR	56.	MIDLAND	BAY
15.	CHARLEVOIX	NOR	57.	MISSAUKEE	NOR
16.	CHEBOYGAN	NOR	58.	MONROE	UNIV
17.	CHIPPEWA	SUP	59.	MONTCALM	GR
18.	CLARE	BAY	60.	MONTMORENCY	NOR
19.	CLINTON	UNIV	61.	MUSKEGON	GR
20.	CRAWFORD	NOR	62.	NEWAYGO	GR
21.	DELTA	SUP	63.	OAKLAND	METRO
22.	DICKINSON	SUP	64.	OCEANA	GR
23.	EATON	UNIV	65.	OGEMAW	NOR
24.	EMMET	NOR	66.	ONTONAGON	SUP
25.	GENESEE	BAY	67.	OCEOLA	NOR
26.	GLADWIN	BAY	68.	OSCODA	NOR
27.	GOGEBIC	SUP	69.	OTSEGO	NOR
28.	GD. TRAVERSE	NOR	70.	OTTAWA	GR
29.	GRATIOT	BAY	71.	PRESQUE ISLE	NOR
30.	HILLSDALE	UNIV	72.	ROSCOMMON	NOR
31.	HOUGHTON	SUP	73.	SAGINAW	BAY
32.	HURON	BAY	74.	SANILAC	BAY
33.	INGHAM	UNIV	75.	SCHOOLCRAFT	SUP
34.	IONIA	GR	76.	SHIAWASSEE	UNIV
35.	IOSCO	NOR	77.	ST. CLAIR	METRO
36.	IRON	SUP	78.	ST. JOSEPH	SWR
37.	ISABELLA	BAY	79.	TUSCOLA	BAY
38.	JACKSON	UNIV	80.	VAN BUREN	SWR
39.	KALAMAZOO	SWR	81.	WASHTENAW	UNIV
40.	KALKASKA	NOR	82.	WAYNE	METRO
41.	KENT	GR	83.	WEXFORD	NOR
42.	KEWEENAW	SUP			

Superior ☐ Southwest ☐ Metro ■ Region Office ★
North ☐ University ☐ TSC (As of 9/00) ▲
Grand ☐ Bay ☐ TSC Open In This County In 2001 ▲

Prepared By Departmental Services
CorelDraw TSCMap2 cdr
Date Revised-September 30, 2000

(Information subject to change without notice.)

SUPERIOR REGION - 1818 Third Avenue North, Escanaba, Michigan 49829 - Phone: 906-786-1800

Crystal Falls TSC 120 Tobin-Alpha Road Crystal Falls, Michigan 49920	Phone: Fax:	906-875-6644 906-875-6264	Construction Permits: Outdoor Advertising Permits: Transport Permits: Utility Coordination: Secretary:	Bill Santilli * Julie Hammill/Candy Armstrong Bill Santilli Julie Hammill
Escanaba TSC 1818 Third Avenue North Escanaba, Michigan 49829	Phone: Toll Free: Fax:	906-786-1800 888-414-6368 906-786-1816	Construction Permits: Outdoor Advertising Permits: Transport Permits: Utility Coordination: Secretary:	Jim Belanger Jim Belanger Patty Heslip Jim Belanger June Pearson
Ishpeming TSC 100 S. Westwood Drive Ishpeming, Michigan 49849	Phone: Fax:	906-485-4270 906-485-4878	Construction Permits: Outdoor Advertising Permits: Transport Permits: Utility Coordination: Secretary:	Chuck Lindstrom * Marion Johnson Chuck Lindstrom Marion Johnson/Connie Isaacson
Newberry TSC 14113 M-28 Newberry, Michigan 49868	Phone: Fax:	906-293-5168 906-293-3331	Construction Permits: Outdoor Advertising Permits: Transport Permits: Utility Coordination: Secretary:	Lou Oberle Lou Oberle Flora McEvers David Rusch Cyndi Carmody

* *Jim Belanger, Escanaba TSC, handles outdoor advertising permits for the Ishpeming and Crystal Falls TSCs.*

NORTH REGION - 2927 D & M Drive, Gaylord, Michigan 49735 - Phone: 517-731-5090 or 888-304-6368 (Toll Free)

Alpena TSC 1540 Airport Road Alpena, Michigan 49707	Phone: Toll Free: Fax:	517-356-2231 877-404-6368 517-354-4142	Construction Permits: Outdoor Advertising Permits: Transport Permits: Utility Coordination: Secretary:	Steve Conradson/Rick Ferguson Rick Ferguson Janet Lee Steve Conradson Janet Lee
Cadillac TSC 100 E. Chapin, P.O. Box 130 Cadillac, Michigan 49601	Phone: Toll Free: Fax:	231-775-3487 800-943-6368 231-775-0301	Construction Permits: Outdoor Advertising Permits: Transport Permits: Utility Coordination: Secretary:	Jack Lyon Dan Baker Betsy Taylor-Brady Dan Lund Dawn Morris
Grayling TSC 1680 Hartwick Pines Road Grayling, Michigan 49738	Phone: Toll Free: Fax:	517-344-1802 888-811-6868 517-344-8403	Construction Permits: Outdoor Advertising Permits: Transport Permits: Utility Coordination: Secretary:	Don Hadd Don Hadd Wilma Genzink Jay Gailitis Wilma Genzink
Traverse City TSC 2084 US-31 South, Suite B Traverse City, Michigan 49684	Phone: Toll Free: Fax:	231-941-1986 888-457-6368 231-941-1512	Construction Permits: Outdoor Advertising Permits: Transport Permits: Utility Coordination: Secretary:	Greg Swanson Greg Swanson * Paul Wisniewski Mary Alford

* *Betsy Taylor-Brady, Cadillac TSC, handles transport permits for the Traverse City TSC.*

GRAND REGION - 1420 Front Street, NW, Grand Rapids, Michigan 49504 - Phone: 616-451-3091

Grand Region Office 1420 Front Street, NW Grand Rapids, Michigan 49504	Phone: Fax:	616-451-3091 616-451-0707	Construction Permits: Outdoor Advertising Permits: Transport Permits: Utility Coordination: Secretary:	Ken Holifield Ken Holifield Kathy Teitsma Mike Lamancusa Lucy Read
Greenville TSC 919 W. Washington Greenville, Michigan 48838	Phone: Fax:	616-754-3619 616-754-3544	Construction Permits: Outdoor Advertising Permits: Transport Permits: Utility Coordination: Secretary:	Jeremy Ball * Mary Beth Hansen ** Mary Beth Hansen

GRAND REGION - (Continued)

Muskegon TSC 2225 Olthoff Drive Muskegon, Michigan 49444	Phone: Fax:	231-777-3451 231-777-3621	Construction Permits: Outdoor Advertising Permits: Transport Permits: Utility Coordination: Secretary:	Tim Terry/Alan Ferrier Alan Ferrier Kathy Bolthouse ** Kathy Bolthouse

* *Ken Holifield, Grand Region office, handles outdoor advertising permits for the Greenville TSC.*
** *Mike Lamancusa, Grand Region office, handles utility coordination for the Greenville and Muskegon TSCs.*

BAY REGION - 55 E. Morley Drive, P.O. Box 14949, Saginaw, Michigan 48601 - Phone: 517-754-0878

Bay City TSC 2590 E. Wilder Road Bay City, Michigan 48706	Phone: Fax:	517-671-1555 517-671-1530	Construction Permits: Outdoor Advertising Permits: Transport Permits: Utility Coordination: Secretary:	Dwight Hankins/Don Hundley * Marilyn Drake Don Matula Marilyn Drake
Cass City TSC 6867 E. Cass City Road Cass City, Michigan 48726	Phone: Fax:	517-872-3007 517-872-4464	Construction Permits: Outdoor Advertising Permits: Transport Permits: Utility Coordination: Secretary:	Jake Weber * Nancy Keyes Dean Roggenbuck Nancy Keyes
Davison TSC 9459 Lapeer Road Davison, Michigan 48423	Phone: Fax:	810-653-7470 810-653-1248	Construction Permits: Outdoor Advertising Permits: Transport Permits: Utility Coordination: Secretary:	Steve Gasser * Desira Robere Keith Brown (Genesee County) Dewane Petzold (Lapeer County) Desira Robere
Mt. Pleasant TSC 1212 Corporate Drive Mt. Pleasant, Michigan 48858	Phone: Fax:	517-773-7756 517-775-6329	Construction Permits: Outdoor Advertising Permits: Transport Permits: Utility Coordination: Secretary:	Ben Burrows * Nancy Brackett Kim Zimmer Nancy Brackett

* *Ponce Esparza, Bay Region office, handles all outdoor advertising permits for the Bay Region. Mr. Esparza can be reached by telephone at 517-754-0784, Ext. 23.*

SOUTHWEST REGION - 1501 E. Kilgore Road, Kalamazoo, Michigan 49001 - Phone: 616-337-3900

Coloma TSC 3880 Red Arrow Highway Benton Harbor, Michigan 49022	Phone: Toll Free: Fax:	616-849-1165 877-321-6368 616-849-1227	Construction Permits: Outdoor Advertising Permits: Transport Permits: Utility Coordination: Secretary:	Brett Arrans (excluding permits for utility companies & commercial driveways)*** * * **
Kalamazoo TSC 1501 E. Kilgore Road Kalamazoo, Michigan 49001	Phone: Toll Free: Fax:	616-337-3917 877-320-6368 616-337-3916	Construction Permits: Outdoor Advertising Permits: Transport Permits: Utility Coordination: Secretary:	Bob Coy - 616-337-3926/Gary Malcolm - 616-337-3921 Lew Fudge - 616-337-3928 Sharon Holt Steve Serdel - 616-337-3933
Marshall TSC 315 Green Street, P.O. Box 47 Marshall, Michigan 49068	Phone: Toll Free: Fax:	616-789-0592 877-324-6368 616-789-0688	Construction Permits: Outdoor Advertising Permits: Transport Permits: Utility Coordination: Secretary:	Tom Katsul (excluding permits for utility companies & commercial driveways)*** * Kari King ** Connie Corbin/Kari King

* At this time, outdoor advertising and transport permits are not being issued at this location. Please contact the Kalamazoo TSC.
** *Steve Serdel, Kalamazoo TSC, handles all the utility coordination for the Southwest Region.*
*** *Bob Coy and Gary Malcom, Kalamazoo TSC, handle all construction permits for utility companies and commercial driveways.*

UNIVERSITY REGION - 301 E. Louis Glick Highway, Jackson, Michigan 49201 - Phone: 517-780-7500

Brighton TSC 10321 E. Grand River, Suite 500 Brighton, Michigan 48116	Phone: Fax:	810-227-4681 810-227-7929	Construction & Adopt-a-Highway Permits: Outdoor Advertising Permits: Transport Permits: Utility Coordination: Secretary:	Marie Wilson (excluding permits for utility companies) Marie Wilson Marie Wilson * Terri Mears

UNIVERSITY REGION - (Continued)

Jackson Specialty Crews Office 800 Chanter Road Jackson, Michigan 49201	Phone: Fax:	517-783-2871 517-783-2236	Construction & Adopt-a-Highway Permits: Outdoor Advertising Permits: Transport Permits: Utility Coordination: Secretary:	** ** Pam Pacyna John Lonskey/Ghazi Mustafa Pam Pacyna
Jackson TSC 2750 N. Elm Road Jackson, Michigan 49201-6802	Phone: Fax:	517-780-7540 517-780-5454	Construction & Adopt-a-Highway Permits: Outdoor Advertising Permits: Transport Permits: Utility Coordination: Secretary:	Doug Jordan (excluding permits for utility companies) Doug Jordan - 517-780-5103 *** *
Lansing TSC 1019 Trowbridge Road East Lansing, Michigan 48823	Phone: Fax:	517-324-2260 517-324-0294	Construction & Adopt-a-Highway Permits: Outdoor Advertising Permits: Transport Permits: Utility Coordination: Secretary:	John Gustina - 517-324-2266 Jeremiah Rivette John Gustina - 517-324-2266 * Jan Pohl

* *John Lonskey, Jackson Specialty Crews, handles all utility coordination and the issuance of construction permits for utility companies for the University Region.*
** *Doug Jordan, Jackson TSC, handles construction, adopt-a-highway, and outdoor advertising permits for the Jackson Special Crews office.*
*** *At this time, transport permits are not being issued at this location. Please contact Pam Pacyna at the Jackson Specialty Crews office.*

METRO REGION - 18101 W. Nine Mile Road, Southfield, Michigan 48075 - Phone: 248-483-5100

Detroit TSC 723 Rosa Parks Boulevard Detroit, Michigan 48216	Phone: Fax:	313-965-6350 313-965-6339	Construction Permits: Outdoor Advertising Permits: Transport Permits: Utility Coordination: Secretary: Adopt-a-Highway:	** Veena Jasuja - Ext. 239 Anna Covington - Ext. 228 Veena Jasuja (Cities of Detroit, Highland Park, Harper Woods, Hamtramck, Grosse Pointe Cities; St. Clair County) - Ext. 239 Barbara Minisee - Ext. 221 Anna Covington - Ext. 228
Macomb TSC 38257 Mound Road Sterling Heights, Michigan 48310	Phone: Fax:	810-978-1935 810-978-8075	Construction Permits: Outdoor Advertising Permits: Transport Permits: Utility Coordination: Secretary:	Linda Zimmerman - Ext. 235 * Ext. 221 Ray Klucens - Ext. 228 Ext. 221
Oakland TSC 2300 Dixie Highway, Suite 300 Waterford, Michigan 48328-1810	Phone: Fax:	248-451-0001 248-451-0108	Construction Permits: Outdoor Advertising Permits: Transport Permits: Utility Coordination: Secretary: Adopt-a-Highway:	Johanna Schwensen - 248-451-2451/Ed Tubbs - 248-451-2452 * (Call general number for information.) May Red-Esmabe - 248-451-2453 Bob Sanborn
Port Huron TSC 3050 Comerce Drive Fort Gratiot, Michigan 48059	Phone: Fax:	810-385-3343 810-385-4548	Construction Permits: Outdoor Advertising Permits: Transport Permits: Utility Coordination: Secretary: Adopt-a-Highway:	Chuck Bergmann - Ext. 313 * Chuck Bergmann - Ext. 313 Dave DeBerardino, Ext. 301 Leanne Reynolds - Ext. 312 Mary Riley (Blue Water Bridge) - 810-984-3131
Taylor TSC 25185 Goddard Road Taylor, Michigan 48180-3923	Phone: Fax:	313-375-2400 313-295-0822	Construction Permits: Outdoor Advertising Permits: Transport Permits: Utility Coordination: Secretary: Adopt-a-Highway:	John Watson (Wayne County and 8 Mile Road [M-102] throughout the Metro Region) - 313-375-2440 * Juanita Riley Jason Voigt (Wayne County outside of the Detroit TSC's area) - 313-375-2428 Juanita Riley Karen Patrick-Newton - 313-375-2405

* *Veena Jasuja, Detroit TSC, handles outdoor advertising permits for the Metro Region and utility coordination for the Port Huron TSC.*
** *John Watson, Taylor TSC, is handling construction permits for the Detroit TSC.*

MICHIGAN COUNTY ROAD COMMISSIONS

Alcona County Road Commission
301 N. Lake St., P. O. Box 40
Lincoln, MI 48724
Phone: 517/736-8168
FAX: 517/736-6687
E-mail: alcorc@northland.lib.mi.us

Alger County Road Commission
324 W. Munising Ave.
Munising, MI 49862
Phone: 906/387-2042
FAX: 906/387-5167
E-mail: acrc@up.net

Allegan County Road Commission
1308 Lincoln Rd.
Allegan, MI 49010-9762
Phone: 616/673-2184
FAX: 616/673-5922
E-mail: roadcom@accn.org

Alpena County Road Commission
1400 N. Bagley St.
Alpena, MI 49707
Phone: 517/354-3252
FAX: 517/356-4952
E-mail: alpcrc@amaesd-net.com

Antrim County Road Commission
319 E. Lincoln St.
P.O. Box 308
Mancelona, MI 49659-0308
Phone: 231/587-8521
FAX: 231/587-8156
E-mail: acrc@torchlake.com

Arenac County Road Commission
116 Bridge St.
P.O. Box 99
Omer, MI 48749
Phone: 517/653-2411
FAX: 517/653-2889
E-mail: jhfacrc@centuryinter.net

Baraga County Road Commission
US-41 South, P.O. Box 217
L'Anse, MI 49946
Phone: 906/524-7270
FAX: 906/524-7268
E-mail: bcrcdjm@up.net

Barry County Road Commission
1845 W. Gun Lake Rd, P.O. Box 158
Hastings, MI 49058
Phone: 616/945-3449
FAX: 616/945-4580
E-mail: barrycrc@voyager.net

Bay County Road Commission
2600 E. Beaver Rd.
Kawkawlin, MI 48631
Phone: 517/686-4610
FAX: 517/686-4620
E-mail: www.baycoroad.org

Benzie County Road Commission
11318 Main St., P.O. Box 68
Honor, MI 49640-0068
Phone: 231/325-3051
FAX: 231/325-2767
E-mail: benzcrc@centurytel.net

Berrien County Road Commission
2860 E. Napier Ave.
P.O. Box 768
Benton Harbor, MI 49023-0768
Phone: 616/925-1196
FAX: 616/925-8098
E-Mail: bcrc@qtm.net

Branch County Road Commission
23 E. Garfield Ave.
Coldwater, MI 49036
Phone: 517/278-2022
FAX: 517/278-6126
E-mail: rglosinski@cbpu.com

Calhoun County Road Commission
13300 Fifteen Mile Rd.
Marshall, MI 49068
Phone: 616/781-9841
FAX: 616/781-6101
E-mail: cccd@internet1.net

Cass County Road Commission
340 N O'Keefe St.
P.O. Box 68
Cassopolis, MI 49031
Phone: 616/445-8611
FAX: 616/445-2376
E-mail: chuck@beanstalk.net

Charlevoix County Road Commission
1251 Boyne Ave.
P.O. Box 39
Boyne City, MI 49712-0039
Phone: 231/582-7330
FAX: 231/582-3110
E-mail: jgvanek@unnet.com

Cheyboygan County Road Commission
729 N. Main St.
Cheboygan, MI 49721
Phone: 231/627-5694
FAX: 231/627-1018
E-mail: ccrc@nmo.net

Chippewa County Road Commission
3939 S. Mackinac Trail
Sault Ste. Marie, MI 49783
Phone: 906/635-5295
FAX: 906/635-5297
E-mail: croad@voyager.net

Clare County Road Commission
3900 E. Mannsiding Rd.
Harrison, MI 48625
Phone: 517/539-2151
FAX: 517/539-7751
E-Mail: kduynslager@voyager.net

Clinton County Road Commission
3536 S. US-27
St. Johns, MI 48879
Phone: 517/224-3274
FAX: 517/224-4003
E-mail: ccrc1@voyager.net

Crawford County Road Commission
500 Huron St., P.O. Box 648
Grayling, MI 49738-0648
Phone: 517/348-2281
FAX: 517/348-6933
E-mail: dab@i2k.com

Delta County Road Commission
3000 32nd Avenue
Escanaba, MI 49829
Phone: 906/786-3200
FAX: 906/786-1510
E-mail: dcrd@portup.com

Dickinson County Road Commission
1107 S. Milwaukee
P.O. Box 519
Iron Mountian, MI 49801
Phone: 906/774-1588
FAX: 906/774-7227
E-mail: dcrcdave@up.net

Eaton County Road Commission
1112 Reynolds Rd.
Charlotte, MI 48813
Phone: 517/543-1630
FAX: 517/543-2608
E-mail: ecrc@voyager.net

Emmet County Road Commission
2265 E. Hathaway Rd
Harbor Springs, MI 49740
Phone: 231/347-8142
FAX: 231/347-5787
E-mail: emmetcrc@racc2000.com

Genesee County Road Commission
211 W. Oakley Street
Flint, MI 48503-3995
Phone: 810/767-4920
Fax: 810/767-5373
E-mail:jdaly@gcrc.org

Gladwin County Road Commission
301 S. State St.
Gladwin, MI 48624
Phone: 517/426-7441
FAX: 517/426-2735
E-mail: rodell@ejourney.com

Gogebic County Road Commission
Courthouse Annex
Bessemer, MI 49911
Phone: 906/667-0233
FAX: 906/663-5807
E-mail: gogcrc@gogebic.cc.mi.us

Grand Traverse Co Road Commission
3949 Silver Lake Rd.
Traverse City, MI 49684
Phone: 231/922-4848
FAX: 231/929-1836
E-mail: gtcrc@traverse.com

Gratiot County Road Commission
200 Commerce Drive
P.O. Box 187
Ithaca, MI 48847
Phone: 517/875-3811
FAX: 517/875-2831
E-mail: gratiotcrc@nethawk.com

Hillsdale County Road Commission
1919 Hudson Rd.
Hillsdale, MI 49242
Phone: 517/437-4458
FAX: 517/437-0048
E-mail: hillscalecrc@voyager.net

Houghton County Road Commission
Royce Road, P.O. Box 269
Hancock, MI 49930
Phone: 906/482-3600
FAX: 906/482-9600
E-mail: hcrceng@bresnanlink.net

Huron County Road Commission
P.O. Box 270, 417
Hanselman St.
Bad Axe, MI 48413
Phone: 517/269-6404
FAX: 517/269-8491

Ingham County Road Commission
301 Bush St., P.O. Box 38
Mason, MI 48854-0038
Phone: 517/676-9722
FAX: 517/676-2085
E-mail: icrc@mich.com

Ionia County Road Commission
169 E. Riverside Dr.
P.O. Box 76
Ionia, MI 48846
Phone: 616/527-1700
FAX: 616/527-8848
E-mail: icrcadmin@ionia-mi.net

Iosco County Road Commission
3939 W. M-55
Tawas City, MI 48763
Phone: 517/362-4433
FAX: 517/362-7727
E-mail: fred@iosco-cty-rd.org

Iron County Road Commission
800 W. Franklin St.
Iron River MI 49935
Phone: 906/265-6686
FAX: 906/265-6680
E-mail: icrcdct@up.net

Isabella County Road Commission
2261 E. Remus Rd.
Mt. Pleasant, MI 48858
Phone: 517/773-7131
FAX: 517/772-2371
E-mail: icrc@gte.net

Jackson County Road Commission
2400 N. Elm, P.O. Box 1125
Jackson, MI 49204-1125
Phone: 517/788-4230
FAX: 517/788-4237
E-mail: jcrc@jcrc-roads.org

Kalamazoo County Road Commission
3801 E. Kilgore Road
Kalamazoo, MI 49003-2127
Phone: 616/381-3171
FAX: 616/381-1760
E-mail: info@kcrc-roads.com

Kalkaska County Road Commission
1049 Island Lake Road
Kalkaska, MI 49646
Phone: 231/258-2242
FAX: 231/258-8205
E-mail: cord@torchlake.com

Kent County Road Commission
1500 Scribner Avenue, NW
Grand Rapids, MI 49504
Phone: 616/242-6900
Fax: 616/242-6980
E-mail: jrice@iserv.net

Keweenaw County Road Commission
1916 Fourth St.
P.O. Box 327
Mohawk, MI 49950
Phone: 906/337-1610
FAX: 906/337-1404
E-mail: jheikkila@portup.com

Lake County Road Commission
1180 N. Michigan Ave.
P.O. Box 790
Baldwin, MI 49304
Phone: 231/745-4666
FAX: 231/745-6227
E-mail: lcrc@carrinter.net

Lapeer County Road Commission
820 Davis Lake Road
P.O. Box 678
Lapeer, MI 48446
Phone: 810/664-6272
FAX: 810/664-0404
E-mail: lcrc@cardina.net

Leelanau County Road Commisison
10550 E. Eckerle Rd.
Suttons Bay, MI 49682
Phone: 231/271-3993
FAX: 231/271-5612

Lenawee County Road Commission
4261 Treat Highway
Adrian, MI 49221-4009
Phone: 517/265-6971
FAX: 517/263-0611

Livingston County Road Commission
3535 Grand Oaks Dr.
Howell, MI 48843-8575
Phone: 517/546-4250
FAX: 517/546-9628
E-mail: mcraine@livingstonroads.org

Luce County Road Commission
423 W. McMillan Ave., P.O. Box 401
Newberry, MI 49868
Phone: 906/293-5741
FAX: 906/293-8516

Mackinac County Road Commission
706 N. State Street
St. Ignace, MI 49781
Phone: 906/643-7333
FAX: 906/643-7606
E-mail: mcrc@sault.com

Macomb County Road Commission
156 Malow Street
P.O. Box 2347
Mt. Clemens, MI. 48046-2347
Phone: 810/463-8671
Fax: 810/469-6130
E-mail: santiac@libcoop.net

Manistee County Road Commission
425 Parkdale Ave.
Manistee, MI 49660
Phone: 231/723-6522
FAX: 231/723-1480
E-mail: mcrc@misd-net.com

Marquette County Road Commission
N. Second St., P.O. Box 10
Ispheming, MI 49849
Phone: 906/486-4491
FAX: 906/486-4493
E-mail: general@marqroad.org

Mason County Road Commission
510 E. State St.
P.O. Box 247
Scottville, MI 49454
Phone: 231/757-2882
FAX: 231/757-2235
E-mail: masoncrc@1010int.com

Mecosta County Road Commission
120 N. DeKraft Ave.
Big Rapids, MI 49307
Phone: 231/796-2611
FAX: 231/796-5287
E-mail: mcrc54@tucker-usa.com

Menominee County Road Commission
W5416 Belgiumtown
P.O. Box 527
Stephenson, MI 49887
Phone: 906/863-5100
FAX: 906/753-4319
E-mail: mcrc@up.lib.mi.us

Midland County Road Commission
2334 N. Meridian Road
Sanford, MI 48657
Phone: 517/687-9060
FAX: 517/687-9121
E-mail: mcrc@concentric.net

Missaukee County Road Commission
1199 N. Morey Rd.
P.O. Box A
Lake City, MI 49651
Phone: 231/839-4361
FAX: 231/839-5381
E-mail: mrc@michweb.net

Monroe County Road Commission
840 S. Telegraph Rd.
Monroe, MI 48161
Phone: 734/240-5100
FAX: 734/240-5101

Montcalm County Road Commission
619 W. Main, P.O. Box 337
Stanton, MI 48888
Phone: 517/831-5285
FAX: 517/831-8776
E-mail: mcrc1@pathwaynet.com

Montmorency Co. Road Commission
11445 M-32
Atlanta, MI 49709
Phone: 517/785-3334
FAX: 517/785-2218
E-mail: mcrc@northland.lib.mi.us

Muskegon County Road Commission
7700 E. Apple Ave.
Muskegon, MI 49442-4999
Phone: 231/788-2381
FAX: 231/788-5793

Newaygo County Road Commission
935 One Mile Rd.
White Cloud, MI 49349
Phone: 231/689-6682
FAX: 2231/689-5994
E-mail: newaygocrc@ncats.net

The Road Commission for Oakland County
31001 Lahser Road
Beverly Hills, MI. 48025
Phone: 248/645-2000
Fax: 248/645-0454
E-mail: rcoc@rcocweb.org

Oceana County Road Commission
3501 W. Polk Rd.
P.O. Box 112
Hart, MI 49420
Phone: 231/873-4226
FAX: 231/873-7123
E-mail: roads@oceana.net

Ogemaw County Road Commission
1250 S. M-33, P.O. Box 157
West Branch, MI 48661
Phone: 517/345-0234
FAX: 517/345-2337
E-mail: mischultz@voyager.net

Ontonagon County Road Commission
415 Spar St.
Ontonagon, MI 49953
Phone: 906/884-2332
FAX: 906/884-4719
E-mail: ocrc@up.net

Osceola County Road Commission
800 S. Chestnut St.
Reed City, MI 49677
Phone: 231/832-5171
FAX: 231/832-0721

Oscoda County Road Commission
300 W. Eighth St.
P.O. Box 760
Mio, MI 48647-0760
Phone: 517/826-3218
FAX: 517/826-3210
E-mail: oscrc@northland.lib.mi.us

Otsego County Road Commission
669 W. McCoy Rd.
P.O. Box 537
Gaylord, MI 49734-0537
Phone: 517/732-5202
FAX: 517/732-6775
E-mail: mroper@freeway.net

Ottawa County Road Commission
Rosy Mound Dr.
P.O. Box 739
Grand Haven, MI 49417
Phone: 616/842-5400
FAX: 616/850-7237
E-mail: info@ottawacorc.com

Presque Isle Co. Road Commission
657 S. Bradley Hwy.
Rogers City, MI 49779
Phone: 517/734-2216
FAX: 517/734-2349
E-mail: piroad@george.lhi.net

Roscommon Co Rd Commission
409 S. Main St.
P. O. Box 117
Roscommon, MI 48653
Phone: 517/275-5181
FAX: 517/275-4715
E-mail: rcrc@voyager.net

Saginaw County Road Commission
3020 Sheridan Ave.
P.O. Box 1867
Saginaw, MI 48605
Phone: 517/752-6140
FAX: 517/752-8934
E-mail: lightfootj_scrc@yahoo.com

Sanliac County Road Commission
35 N. Flynn St., P.O. Box 231
Sandusky, MI 48471-0231
Phone: 810/648-2185
FAX: 810/648-5810
E-mail: roadcom@greatlakes.net

Schoolcraft County Road Commission
P.O. Box 160
Manistique, MI 49854
Phone: 906/341-5634
FAX: 906/341-2972
E-mail: scrcbert@up.net

Shiawassee County Road Commission
701 W. Corunna Ave.
P.O. Box 96
Corunna, MI 48817-0096
Phone: 517/743-2228
FAX: 517/743-5008
E-mail: roads@shianet.org

St. Clair County Road
Commission
21 Airport Dr.
St. Clair, MI 48079-1404
Phone: 810/364-5720
FAX: 810/364-9050
E-mail: scrc@mich.com

St. Joseph County Road
Commission
20914 M-86
Centreville, MI 49032-9622
Phone: 616/467-6393
FAX: 616/467-4433
E-mail:
sjcroadcomm@voyager.net

Tuscola County Road
Commission
1733 S. Mertz Rd.
Caro, MI 48723
Phone: 517/673-2128
FAX: 517/673-3294
E-mail: tche@centurytel.net

Van Buren County Road
Commission
325 James St., P.O. Box 156
Lawrence, MI 49064
Phone: 616/674-8011
FAX: 616/674-3770
E-mail: vbcrc@btc-bci.com

Washtenaw County Road
Commission
555 N. Zeeb Rd.
P.O. Box 1528
Ann Arbor, MI 48106
Phone: 734/761-1500
FAX: 734/761-3239
E-mail:
wcrc@co.washtenaw.mi.us

Wayne County Road
Commission
415 Clifford Street, 8th Fl.
Detroit, MI. 48226-1518
Phone: 313/224-7702
Fax: 313/224-2609

Wexford County Road
Commission
85 W. M-115, P.O. Box 49
Boon, MI 49618
Phone: 231/775-9731
FAX: 231/775-9732
E-mail: wohlford@prodigy.net

METROPOLITAN PLANNING ORGANIZATIONS (MPO)

Mr. Sandeep Dey, Executive Director
West Michigan Shoreline
Regional Development Commission
P.O. Box 387
Muskegon, MI 49443-0387
(231) 722-7878
Fax: (616) 722-9362
E-mail: sdey@wmsrdc.org

Mr. Gerald Felix, Executive Director
Grand Valley Metro Council
40 Pearl St., NW, Ste. 410
Grand Rapids, MI 49503-3027
(616) 776-3876
Fax: (616) 774-9292
E-mail: felixg@gvmc.org

Ms. Julie Hinterman, Principal Planner
Genesee County Metropolitan
Planning Commission
1101 Beach Street, Room 223
Flint, MI 48502-1470
(810) 257-3010
Fax: (810) 257-3185
E-mail: gcmpcadmin@attmail.com

Mr. Paul Tait, Executive Director
Southeast Michigan Council
of Governments
660 Plaza Drive, Ste. 1900
Detroit, MI 48226
(313) 961-4266
Fax: (313) 961-4869
E-mail: tait@semcog.org

Ms. Pat Karr, Executive Director
Battle Creek Area Transportation Study
Springfield Municipal Building
601 Avenue A
Springfield, MI 49015
(616) 963-1158
Fax: (616) 963-4951
E-mail: bcats01@aol.com

Mr. Charles Reisdorf, Executive Director
Region 2 Planning Commission
Jackson County Tower Building
120 W. Michigan Avenue
Jackson, MI 49201
(517) 788-4426
Fax: (517) 788-4635
E-mail: creisdorf@region2planning.com

Mr. Jon Coleman, Executive Director
Tri-County Regional Planning Commission
913 W. Holmes Road, Ste. 201
Lansing, MI 48910
(517) 393-0342
Fax: (517) 393-4424
E-mail: tcrpc@acd.net

Ms. Judy Lammers, Executive Director
Southwestern Michigan Commission
185 East Main Street, Suite 701
Benton Harbor, MI 49022
(616) 925-1137
Fax: (616) 925-0288
E-mail: swmicomm@cpuinc.net

Mr. William Wright, Director
Saginaw County Metropolitan
Planning Commission
400 Court St.
Saginaw, MI 48602
(517) 797-6800
Fax: (517) 797-6809
E-mail: scmpc@voyager.net

Mr. Gary Stanley, BCATS Director
Bay County Planning Department
515 Center Ave.
Bay City, MI 48708
(517) 895-4110
Fax: (517) 895-4068
E-mail: gstan99@yahoo.com

Mr. David Krueger, Director
Kalamazoo Area Transportation Study
3801 E. Kilgore Rd.
Kalamazoo, MI 49001-5534
(616) 343-0766
Fax: (616) 381-1760

Ms. Sue Higgins, Executive Director
Macatawa Area Coordinating Council
400 - 136th Ave., Ste. 416
Holland, MI 49424
(616) 395-2688
Fax: (616) 395-9411
E-mail: sus@macatawa.org

* Mr. William Knight, Executive Director
Toledo Metropolitan Area Council
of Governments
300 Central Union Plaza
Toledo, Ohio 43602
(419) 241-9155
Fax: (419) 241-9116
E-mail: knight@tmacog.org

* (Monroe, MI 3C Area is part of the Toledo Urbanized Area, but is under the SEMCOG MPO)

H:\MISC\MPO.LST
March 20, 2001

State Planning and Development Regions

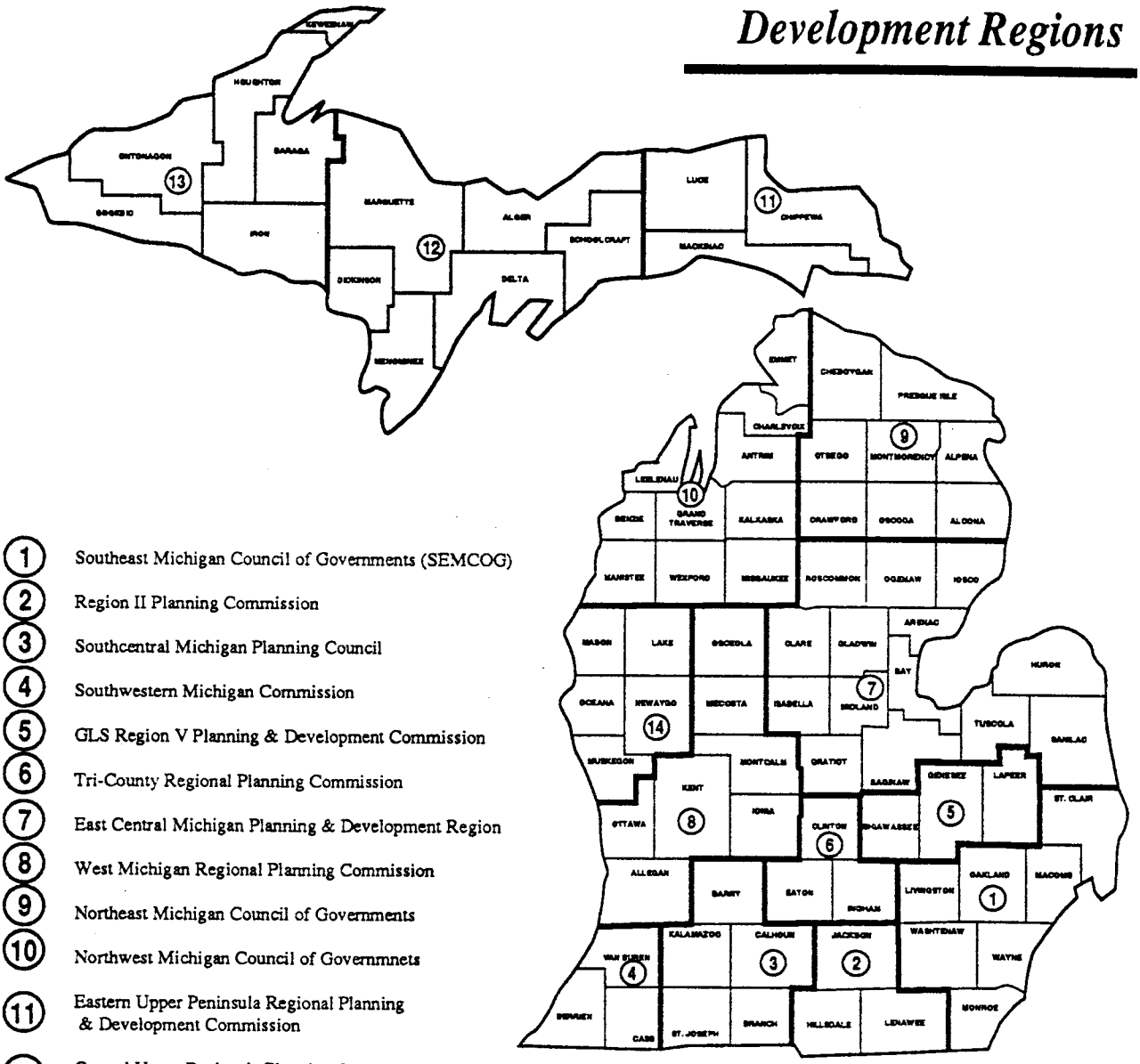

1. Southeast Michigan Council of Governments (SEMCOG)
2. Region II Planning Commission
3. Southcentral Michigan Planning Council
4. Southwestern Michigan Commission
5. GLS Region V Planning & Development Commission
6. Tri-County Regional Planning Commission
7. East Central Michigan Planning & Development Region
8. West Michigan Regional Planning Commission
9. Northeast Michigan Council of Governments
10. Northwest Michigan Council of Governmnets
11. Eastern Upper Peninsula Regional Planning & Development Commission
12. Central Upper Peninsula Planning & Development District
13. Western Upper Peninsula Planning & Development Commission
14. West Michigan Shoreline Regional Development Commission

Contact Person:
Larry Miller – Phone: (517) 335-2967

Regional Planning Agencies

Region 1	Mr. Paul Tait, Executive Director Southeast Michigan Council of Governments 660 Plaza Drive, Ste. 1900 Detroit, MI 48226	(313) 961-4266 Fax: (313) 961-4869 e-mail: tait@semcog.org
Region 2	Mr. Charles Reisdorf, Executive Director Region 2 Planning Commission Jackson County Tower Building 120 W. Michigan Avenue Jackson, MI 49201	(517) 788-4426 Fax: (517) 788-4635 e-mail: creisdorf@region2planning.com
Region 3	Mr. Rand D. Bowman, Executive Director Southcentral Michigan Planning Council (SMPC) 576 Romence P.O. Box 2137 Portage, MI 49024	(616) 323-0045 Fax: (616) 323-1544 e-mail: smpc@net-link.net
Region 4	Ms. Judy Lammers, Executive Director Southwestern Michigan Commission 185 East Main Street, Suite 701 Benton Harbor, MI 49022-4440	(616) 925-1137 Fax: (616) 925-0288 e-mail: swmicomm@cpuinc.net
Region 5	Mr. Chapin Cook, Fiscal Officer GLS Region V Planning and Development Commission 1101 Beach Street, Suite 223 Flint, MI 48502	Julie Hinterman, Principal Planner 9-1-810-257-3010 Tom Goergen 9-1-810-766-6560 Fax: (810) 257-3185 e-mail: jhinterman@co.genesee.mi.us
Region 6	Mr. Jon Coleman, Executive Director Tri-County Regional Planning Commission 913 W. Holmes Road, Suite 201 Lansing, MI 48910	(517) 393-0342 Fax: (517) 393-4424 e-mail: tcrpc@acd.net (Paul Hamilton: tritrans@acd.net)
Region 7	Ms. Sue Fortune, Executive Director East Central Michigan Planning and Development Region 3535 State St. Saginaw, MI 48602-3261	(517) 797-0800 or 797-0803 Fax: (517) 797-0896 e-mail: ecmpdr@concentric.net
Region 8	Mr. David Bee, Director West Michigan Regional Planning Commission 820 Monroe NW, Ste. 214 Grand Rapids, MI 49503	(616) 774-8400 Fax: (616) 774-0808 e-mail: wmrpc@iserv.net

Region 9	Ms. Diane Rekowski, Director Northeast Michigan Council of Governments 121 E. Mitchell P.O. Box 457 Gaylord, MI 49735	(517) 732-3551 Fax: (517) 732-5578 e-mail: drekowski@nemcog.org
Region 10	Mr. Alton Shipstead, Director Northwest Michigan Council of Governments 2200 Dendrinos Dr., Ste. 201 P.O. Box 506 Traverse City, MI 49685-0506 (Joe Gallagher, Transportation Planner) (231-929-5061)	(231) 929-5000 Fax: (231) 929-5012 e-mail: jgallagh@nwm.cog.mi.us
Region 11	Mr. John Campbell, Executive Director Eastern Upper Peninsula Regional Planning and Development Commission 524 Ashmun, P.O. Box 520 Sault Ste. Marie, MI 49783	(906) 635-1581 Fax: (906) 632-4255 e-mail: euprpdc1@up.net
Region 12	Mr. Dave Gillis, Executive Director Central Upper Peninsula Planning and Development Regional Commission 2415 14th Avenue, South Escanaba, MI 49829	(906) 786-9234 Fax: (906) 786-4442 e-mail: cuppad@up.net
Region 13	Mr. James L. Stingle, Executive Director Western Upper Peninsula Planning and Development Regional Commission 326 Shelden Ave. P.O. Box 365 Houghton, MI 49931	(906) 482-7205 Fax: (906) 482-9032 e-mail: wuppdr@up.net
Region 14	Mr. Sandeep Dey, Executive Director West Michigan Shoreline Regional Development Commission 137 Muskegon Mall P.O. Box 387 Muskegon, MI 49443-0387 e-mail: sdey@wmsrdc.org	(616) 722-7878 (Matt Morris, Program Manager, Transportation Programs/Ext. 107) Fax: (616)722-9362 e-mail: mmorris@wmsrdc.org

Web Page: www.wmsrdc.org

March 20, 2001 Common Drive, Misc\Region.lst)

MODEL MEMORANDUM OF UNDERSTANDING
Concerning Cooperative Intergovernmental Development of an Access Management Plan, Regulations and a Coordinated Development Review Process

BACKGROUND INFORMATION

The attached model Memorandum of Understanding is presented to implement the principles of access management included in the ***Access Management Guidebook*** published by the Michigan Department of Transportation (MDOT) in October 2001. It is premised on the recognition that many local land use decisions have an impact on abutting roads and that many MDOT and County Road Commission road improvement decisions have impacts on subsequent land use decisions. Since local governments have, for the most part, authority to make unilateral land use decisions outside the right-of-way of public roads under a variety of zoning, subdivision, land division, building and related regulations, and since state and county road authorities have, for the most part, unilateral authority to issue permits for driveway access across the right-of-way to state highways and county roads, and to make most road improvement decisions, the potential for local governments to make decisions that undermine the integrity of decisions by road authorities, or vice versa, is very great. This land use/transportation relationship can be mutually beneficial for state, county and local governments, as well as for the private sector when decisions are coordinated. At the same time, this relationship can result in unnecessary problems and intergovernmental conflicts when the relationship is ignored. With demands for road improvements rising faster than available revenues and with land use changes creating the need for some road improvements, and undermining the integrity of others, the need for formal coordination between local governments and road authorities has never been greater. This model Memorandum of Understanding provides a mechanism for all affected governmental entities to work together in partnership to achieve common objectives and better serve the citizens and businesses of Michigan.

The following paragraphs *(which should be modified to fit local circumstances)* may be a desirable summary of existing conditions to use as background or a preamble to the model Memorandum of Understanding. Communities could also choose to just use the Memorandum of Understanding text without the front summary material as well.

Rationale for and Description of a Coordinated Process for Preparing an Access Management Plan [or a Corridor Management Plan -- *choose one*]

Concern about worsening traffic congestion in the communities of _____, _____ and _____ *(insert name of communities)* has led these communities to find ways to cooperate to effectively cope with this important aspect of the quality of life for residents. _____ *(name of road corridor)* is an arterial highway that links these communities in their business, educational, social and recreational activities. _____ *(name of road corridor)* is characterized by growing traffic congestion as well as continued _____ *(commercial, industrial, residential, office--select as pertinent)* development of land adjacent to the highway. The Michigan Department, of Transportation *(and/or County Road Commission)* _____ *(has been requested to make, is considering, has planned, has completed--insert as appropriate)* several highway improvement projects in the corridor intended to address congestion and safety problems. Much of the congestion and many of the traffic crashes can be attributed to traffic conflicts associated with the numerous driveways serving the various commercial and other developments along the highway. Continuing development threatens to worsen the existing problems. Cooperative planning and coordinated regulation will permit new development without exacerbating existing problems and will stretch the utility of future road improvements. *(Modify these sentences to fit the situation).*

Therefore, the communities of _____ *(insert name of communities),* the _____ County Road Commission and the Michigan Department of Transportation propose to develop a coordinated Access Management Plan *(use the phrase Corridor Management Plan here and hereafter if that type of plan is being prepared instead)* with the goal of facilitating development of land along _____ *(name of road corridor)* while preserving the safe and efficient movement of traffic. Because much of the land is already developed, retrofit of existing development to improved access configurations will be a concern *(include this sentence only if appropriate)*. Existing businesses, landowners and the traveling public will be involved in the development of the Access Management Plan to assure a realistic and achievable set of recommended actions. Directing new development into safe and efficient access configurations will be the focus on undeveloped parcels. Pedestrian and bicycle accommodation and aesthetic enhancement will also be considered. The possible need for future right-of-way and minimizing negative impacts on new development will also be addressed.

The Plan will contain recommendations for appropriate additions to existing land use regulations for the corridor such as: adjustments to land use density and permitted land uses, frontage requirements, setback requirements, shared and joint access requirements, driveway spacing standards, corner clearance standards, improved site circulation, and subdivision regulations that support

the development of local roads and service drives. *(Modify this list as appropriate.)*

The Plan will also contain recommended road improvements such as widening, medians, turn lanes, median openings and future intersections, frontage and/or service roads and local road improvements. Funding sources for the recommended improvements will be identified. Sketch plans, and delineating recommendations for improved and/or safer access to existing businesses will be produced for the developed portions of the corridor. *(Modify this list as appropriate.)*

The planning effort will be guided by an Advisory Committee that includes representatives from each community, from the County Planning Department, the County Road Commission, _____ *(name of any other group, such as a regional planning commission or MPO)* and from MDOT.

Following adoption of the Access Management Plan, coordinated access management standards and other land use regulations consistent with the Access Management Plan will be prepared for the corridor, and processes will be put into place to ensure subsequent land use and driveway permit decisions are made consistent with the Access Management Plan and adopted regulatory standards.

The following Resolution and Memorandum of Understanding is offered in view of the need for a cooperative and coordinated effort on the part of local governments along the_____ *(name of road corridor)*. The Memorandum should be viewed as a community and road authority commitment to participation in the area wide planning and coordinated development of the _____ *(name of road corridor)*.

****

RESOLUTION # _____

WHEREAS the governing body of _____*(name of the city, village, township or county)* with offices located at _____*(address of city, village or township hall, or county building)* recognizes the need for coordinated planning along the _____ *(name of road corridor)*; and

WHEREAS the governing body of _____*(name of the city, village, township or county)* recognizes the need to prepare and implement coordinated land use and access management standards along the _____ *(name of road corridor)* in the interest of all parties; and

WHEREAS the governing body of _____ *(name of the city, village, township or county)* has reviewed-the Memorandum of Understanding which is attached hereto and made part hereof and which is agreed to by all parties who have signed it at the end;

NOW, THEREFORE, BE IT RESOLVED that the governing body of _____*(name of the city, village, township or county)* hereby adopts the said Memorandum of Understanding as a policy document and instructs the staff and affected Boards and Commissions of _____*(name of the city, village, township or county)* to implement the provisions thereof.

Adopted this _____ day of _____, 200_.

MEMORANDUM OF UNDERSTANDING

THIS AGREEMENT is entered into effective as of the _____ day of _____ 200_, by and among the _____ *(name of jurisdiction(s))* (hereafter referred to as "Local Governments"), and _____ *(name of county road commission if relevant)* (hereafter referred to as "Road Commission"), and the State of Michigan, Department of Transportation (hereafter referred to as the "Department"), all of said parties being referred to collectively herein as the "Agencies."

Purpose
The purpose of this Memorandum of Understanding is for local governments and road authorities along the _____ *(name of road corridor)* to voluntarily coordinate planning, land use, driveway permit and road improvement decisions. The Agencies recognize that planned orderly land development that is coordinated with road improvements results in less traffic congestion, safer operation and a more efficient use of limited infrastructure resources. Equally important, cooperative planning will allow continued economic development by preserving and enhancing the safe and efficient movement of traffic.

Recitals
WHEREAS:

A. Local Governments are authorized by planning, zoning and land division enabling acts to regulate land use adjacent to public highways within its jurisdiction; and

B. The Road Commission and Department are authorized under various state laws to provide for and maintain a road and highway system in Michigan and under PA 200 of 1969, as amended, to regulate access to the road and highway system; and

C. The coordinated regulation of vehicular access to public highways is necessary to maintain the efficient and smooth flow of traffic, to reduce the potential for traffic crashes, to protect the functional level of roadways, to optimize the traffic capacity, and to protect the public health, safety and general welfare; and

D. The Agencies desire to provide for the coordinated planning, regulation and improvement of vehicular access between the road and abutting land for the section of_____ *(name of road corridor)*, between _____ *(name of intersection)* and _____ (hereafter referred to as the "Corridor"), which is within the jurisdiction of the Agencies; and

NOW THEREFORE, the Agencies agree to voluntarily participate in a comprehensive, cooperative, and continuing planning process to prepare, adopt and implement a comprehensive and mutually acceptable Access Management Plan *(or Corridor Management Plan)* for the Corridor for the purposes above recited and as further detailed as follows:

1. A Corridor Advisory Committee is established and all Agencies agree to appoint members who will diligently participate as members of the Committee. The Corridor Advisory Committee shall consist of _____ members *(typically not more than nine)*. The Committee shall include one member appointed by the governing body of _____ and _____ *(names of all the local governments within the Corridor that are participating in the Agreement)*. The remaining members will consist of ____ members *(typically not more than two)* from the Michigan Department of Transportation, one member each from the _____ County Road Commission, _____ County Planning Department and the _____ *(name of regional planning commission or MPO responsible for road planning)*.

2. The Corridor Advisory Committee shall develop a draft of the Access Management Plan *(or Corridor Management Plan)* following the guidelines established in the ***Access Management Guidebook*** published by the Department in October 2001. The draft Plan shall be circulated among all the Agencies for review and comment. The Plan shall be revised to reflect comments received and once consensus on the Plan among the members of the Corridor Advisory Committee has been achieved, it shall be adopted by the Corridor Advisory Committee. An adopted copy of the Plan shall be provided to the governing body of each Local Government, Road Commission and to the Michigan Department of Transportation office which was involved in its preparation.

3. The Agencies agree that they will cooperate in the development, review and adoption of Local Government access management regulations

following the guidelines established in the ***Access Management Guidebook*** published by the Department in October 2001 in order to implement the adopted Access Management Plan *(or Corridor Management Plan).*

4. On properties within the Corridor, the Agencies agree that they will cooperate in development, review and approval of procedures for review and approval of Local Government land development applications (including but not limited to lot splits, plats, rezonings, special land uses, PUDs, site plans and some variances), and on procedures for driveway permit decisions of the Road Commission and Department following the guidelines established in the ***Access Management Guidebook*** published by the Department in October 2001.

5. The Agencies agree that, insofar as authorized by law and local ordinance, they will cooperate in review of specific applications for a development or driveway permit that coordinates the decision so there is assurance the standards and requirements of all applicable Agencies are met prior to permit issuance by any one entity, including methods for conditioning approval of one permit upon receipt of a permit from another entity. It is further agreed that this will most commonly be achieved by a meeting of the Corridor Advisory Committee called at the request of a local member of government to review and comment on any proposed rezonings, new Planned Unit Developments, or site plan for a development which may measurably affect the _____ Corridor--unless a different procedure is established in the Access Management Plan *(or Corridor Management Plan*).

6. The Agencies agree that insofar as authorized by law and local ordinance, vehicular access to the Corridor shall be permitted by the Agency(ies) having jurisdiction only when such access is in compliance with the adopted Access Management Plan *(or Corridor Management Plan)* for the Corridor, with PA 200 of 1969 as amended and any administrative rules or Department guidelines established to implement Act 200, with adopted local access management regulations, and this Agreement.

7. Accesses which were in existence in compliance with Act 200 of 1969 as amended prior to the effective date of this Memorandum of Understanding, may continue in existence until such time as a change in the access is required by Act 200, or by pertinent regulations of Local Governments. When closure, modification, or relocation of access is required, the Agency(ies) having jurisdiction shall utilize appropriate legal process to effect such action.

8. Actions taken by any Agency with regard to transportation planning and traffic operations within 1/4 mile of the Corridor covered by this Agreement shall be in conformity with this Memorandum of Understanding *(unless a*

larger area is included in the adopted Access Management Plan in which case this sentence should be modified accordingly). Design waivers may be approved if agreed upon by the Agencies to this Agreement according to the procedures established in #4 above.

9. Parcels of real property which adjoin the Corridor and were created after the effective date of the Access Management Plan *(or Corridor Management Plan)* created under this Agreement shall not be provided with direct access to the Corridor unless the location, use and design thereof conform with the Access Management Plan *(or Corridor Management Plan)* prepared under this Agreement, and all applicable laws and regulations.

10. This Agreement is based upon and is intended to be consistent with Act 200 of 1969, as amended and all administrative rules and guidelines established pursuant to it, as now or hereafter constituted. An amendment to either Act 200 or its administrative rules which becomes effective after the effective date of this Agreement and which conflicts irreconcilably with an express provision of this Agreement shall, to that extent, supercede the conflicting provision.

11. This Agreement does not create any current financial obligation for any Agency. Any future financial obligation of any Agency shall be subject to the execution of an appropriate encumbrance document, where required. This agreement does not require any signatory to forego the exercise of any of its legal authority, powers or obligations.

12. This agreement is intended to facilitate cooperation in the exercise of the relevant powers of the signatories for their mutual benefit, but is not intended to deny any signatory of its ultimate legal authority to independently administer and enforce its laws, rules and ordinances.

13. No portion of this Agreement shall be deemed to constitute a waiver of any immunities the parties or their officers or employees may possess, nor shall any portion of this Agreement be deemed to have created a duty of care which did not previously exist with respect to any person not a party to this Agreement.

14. A signatory may withdraw from this agreement following 30 days written notice to all other signatories of an intension to withdraw.

The undersigned governmental Agencies which are signatories to this Memorandum of Understanding jointly and mutually agree to its terms and conditions.

_____	_____
(name of City, Village or Township)	*(name of person attesting)*
_____	_____
(Mayor, President or Township Supervisor)	*(Position: usually Clerk)*
_____	_____
(name of City, Village or Township)	*(name of person attesting)*
_____	_____
(Mayor, President or Township Supervisor)	*(Position: usually Clerk)*
_____	_____
(name of City, Village or Township)	*(name of person attesting)*
_____	_____
(Mayor, President or Township Supervisor)	*(Position: usually Clerk)*
Michigan Dept. of Transportation	_____
	Director
	_____
	(Name of person attesting)
Concur: Michigan Dept. of Transportation (Name of Director of Regional office or Service Center)	_____
	Director
	_____
	(Name of person attesting)
_____ County Road Commission	_____
	Director
	_____
	(Name of person attesting)

SAMPLE CROSS ACCESS AGREEMENT

Background: The following is an example of a cross access agreement from the City of Orlando. It is provided as an example only. Local governments should consult their attorney for advice in preparing these agreements.

THIS AGREEMENT is made and entered into on this *(date) by (owner's name),* a corporation authorized to transact business in the State of Florida ("OWNER") and the City of Orlando, a municipal corporation organized under the laws of the State of Florida "CITY".

RECITALS

1. OWNER owns certain real property ("Parcel A") located *(legal description of property).*
2. As a part of its land use approvals from the CITY, the OWNER has been requested by CITY to provide cross access to adjacent properties to *(location of abutting properties),* subject to the terms and conditions set forth below.
3. The CITY has a health, safety and welfare interest in providing for the cross access easement.
4. The OWNER acknowledges the CITY's health, safety and welfare interest and agrees to provide said cross access subject to the terms and conditions set forth in this Agreement.

NOW, THEREFORE, in consideration of the obligations contained herein, and in good and valuable consideration, the receipt and sufficiency of which is hereby acknowledged, the OWNER and the CITY hereby agree as follows:

Section 1. Recitals. The recitals are acknowledged by both parties and incorporated herein and have been relied upon by both parties in the execution of this Agreement.

Section 2. Grant of Easement in Escrow. Subject to the terms set forth in this agreement, the OWNER hereby grants a cross access easement to the CITY to be held in escrow for the benefit of the owner of that parcel located *(location of abutting property #1).* The cross access easement is described in *(Exhibit #)* attached to and incorporated in this Agreement. Said cross access easement shall be freely assignable to said Owner; provided, however, that the CITY shall not assign said easement until the Owner of *(abutting property #1)* applies for or is issued any of the following land development approvals as defined in the City Code.

(1) conditional use permit;
(2) rezoning;
(3) master plan approval;
(4) plat approval;
(5) variance;
(6) building permit for a substantial enlargement or substantial improvement;

(7) building permit which generates automobile traffic trips in excess of current improvements;
(8) driveway permit; or
(9) paving and/or drainage permit.

Likewise, the OWNER hereby grants a cross access easement to the CITY to be held in escrow for the benefit of the owner of that parcel located *(location of abutting property #2).* This cross access easement area shall be of a size similar to that of the one granted for use by the Owner of *(adjacent property #1)* and said location shall be later determined by the CITY and OWNER. Said cross access easement shall be freely assignable to said Owner. Notwithstanding anything to the contrary contained herein, however, the CITY shall not assign a cross access easement to either Owner unless the land use proposed for that Owner's parcel is consistent and compatible with the land use on the OWNER's property.

Section 3. Conditions of the Use of the Cross Easement Agreement. The use of two cross access easements to be granted to the CITY and held in escrow pursuant to Section 2 hereof is subject to the following terms and conditions:

(1) The Owner of *(adjacent property #1)* shall equally share with OWNER in the maintenance and repair of the cross access easement area as designated in the attached *(Exhibit #);*
(2) The Owner of *(adjacent property #2)* shall equally share with OWNER in the maintenance and repair of the cross access easement area to be designated by CITY and OWNER;
(3) The Owners of *(both adjacent properties)* to receive such cross access agree to pay the cost of two (2) signs placed on their respective parcels at each side of the pavement of the easement area and the common boundary line of their respective parcel with Parcel A (facing those parcels) which signs shall state that the parking in Parcel A is limited to the guests of the OWNER and the vehicles of unauthorized persons (guests, licensees, invitees, patrons, etc. of the other parcel) shall be towed away at the vehicle owner's expense;
(4) The owners of *(both adjacent properties)* agree to install and maintain on the common boundary line with Parcel A, or other location agreed to by the parties (a) a speed bump and stop sign within the cross access easement leading into *(adjacent property #1),* (b) a speed bump and stop sign within the cross access easement leading into *(adjacent property #2),* and (c) one speed bump each on *(both adjacent properties);*
(5) The use of the cross access easements shall also be subject to (a) a weight limit on the vehicles which utilize the cross access easement (to be established or modified by the CITY's transportation engineer from time to time), (b) a limit on the number of daily trips of no more than 1,000 trips, and (c) a limit on the time of access;
(6) The Owners of *(both adjacent properties)* shall pay the cost of installation of said gates and any other improvements to the cross access easement beyond what has been previously constructed by the OWNER;
(7) Tractor trailer vehicles shall not use the cross access easement for access to or from *(both adjacent properties)*;

(8) Buses seating 30 passengers or more may use the cross access easements so long as the buses stack or queue on *(both adjacent properties)* and not in the cross access easement areas;

(9) The Owners of *(both adjacent properties)* shall not use the cross access easement in any manner such as to result in congestion within the cross access easements or the blocking of the cross access easement or driving aisles of Parcel A; and

(10) The cross access easements shall be subject to the joinder and consent of the lender(s) of the OWNER and the Owners of *(both adjacent properties).*

Section 4. Delegation to CITY Transportation Engineer, The parties agree that the CITY transportation engineer has the power and authority to adjust the conditions set forth in Subsection 3(5) hereof in order to preserve the integrity, character, safety of the *(type of land use on OWNER's property).*

Section 5. Covenant Running with the Land. All rights and obligations arising or described hereunder are intended to be appurtenances and covenants running with the title of the OWNER's property and shall be binding upon and inure to the benefit of the parties and their respective successors in title.

Section 6. Dedication. Nothing contained herein shall constitute any rights in the general public.

Section 7. Captions, Number and Gender. The captions and headings are for convenience only and are not intended to be used in construing any provision of this easement. The singular and plural shall each include the other were appropriate, or if any genders shall include other genders when the contract so permits.

Section 8. Governing Law and Venue. The laws of the State of Florida shall govern this agreement. Any legal action instituted herein shall be brought in Orange County, Florida.

Section 9. Modification or Termination. The terms and provisions of this Agreement may be modified, supplemented or terminated only by a written instrument executed by the OWNER and CITY, their successors or assigns.

Section 10. Recording. This Agreement shall be recorded by the OWNER at its sole expense in the public records of Orange County, Florida.

Section 11. Joinder and Consent. The OWNER hereby agrees to obtain the Joinder and Consent to this Agreement from any superior interest, right, title, lien, encumbrance to Parcel A. The Joinder and Consent shall Subordinate the particular interest to this Agreement.

Section 12. Obligation of the CITY . The CITY agrees that it will condition the issuance of any of the permits listed in Section 2, above, to the Owner of parcel adjacent to

Parcel A upon the condition that said owner enter into the Cross Access Easement Agreement.

Section 13. No Easement Rights or Other Rights. Notwithstanding anything to the contrary herein, *(both adjacent properties)* shall have no rights to, on, in or over the Easement Area until the Cross Access Easement Agreement is agreed upon between the parties, executed by the appropriate entities and recorded in the public records of Orange County, Florida.

Section 14. Severability . If any term, provision, clause, sentence or other portion of this Agreement shall become or be determined to be illegal, null or void for any reason, or shall be held by any court of competent jurisdiction to be so, the remaining portions thereof shall remain in full force and effect.

Section 15. Entire Agreement. This Agreement constitutes the entire agreement between the parties and supersedes any previous discussions, understandings, and agreements.

IN WITNESS WHEREOF, the parties have caused this Agreement to be executed on the date first stated above.

Reprinted from: Model Land Development & Subdivision Regulations That Support Access Management for Florida Cities and Counties, Center for Urban Transportation Research, Tampa, Florida, January 1994.

Mutual Access Easement Agreement

By and Between:

_____ Development Company, Inc.,
Delta Charter Township,
&
_____

This agreement is made and entered into this _____ day of _____ 200__ by and between _____ Development Company, Inc., henceforth referred to as DEVELOPER ; _____, henceforth referred to as 2ND PARTY; and Delta Charter Township, henceforth referred to as Delta.

WHEREAS, DEVELOPER is the current owner and interest holder of the property legally described as *(insert legal description),* henceforth referred to as "Parcel A"; and Delta is the current holder and interest holder of the property legally described as *(insert legal description),* henceforth referred to as "Parcel B"; and 2ND PARTY is the owner and interest holder of the property legally described as *(insert legal description),* henceforth referred to as Parcel C , and

WHEREAS, Chapter 21 of the 1990 Delta Township Zoning Ordinance, as amended, entitled "Arterial Access Management Regulations" mandates, where possible, the establishment of shared driveways, parking lot connections, and other cross access arrangements for properties along regional arterial roadways such as West Saginaw Highway (M-43), and

WHEREAS, it is has been stipulated by the Delta Township Planning Commission, in approving the preliminary site plan for the _____ (*name of development)* at Delta Township shopping that it is necessary to establish a means of cross access between Parcel A, Parcel B, and Parcel C, in order to facilitate efficient traffic operations and improve public safety along regional arterial roadways, now

THEREFORE, in consideration of the foregoing and the terms and conditions contained herein, the above named parties agree as follows:

1. Access Easement

    a. An easement shall be created which shall allow the above named parties and the general public vehicular and pedestrian access

across Parcel A, Parcel B, and Parcel C. Said easement being illustrated on the attached Exhibit A, and legally described as follows:

(insert legal description)

b No physical barrier including, but not limited to, curbs, structures, buildings, signs, parking spaces, and product displays shall be placed across the easement in such a manner as to block access across and/or between Parcel A, Parcel B, and/or Parcel C.

c. Details pertaining to the placement of the access drive within the easement shall be illustrated on the final site plans for any future developments on Parcel A, Parcel B, and/or Parcel C, or any portions thereof. Said plans shall be submitted to the Delta Charter Township for review and approval.

d. Properties located adjacent to the easement shall be permitted to connect their parking areas, aisleways, driveways, etc. to the access drive within the easement. The easement and corresponding access drive shall be open for use by the general public.

e. The easement shall be permanently recorded with the Eaton County Register of Deeds.

2. The owners of Parcel A, Parcel B, and Parcel C hereby covenant and agree that this agreement shall be binding and shall inure to the benefit of the parties hereto, their successors, assigns, tenants, and subtenants, and that the covenants herein contained shall be deemed to be covenants running with the land.

3. DEVELOPER shall be responsible for the payment of any and all costs and expenses incurred and arising out of any use of the easement for any of the purposes described and set forth in this agreement including, but not limited to, any cost and expenses incurred in the construction, maintenance and repair of the pavement within that portion of the easement area located on Parcel A. 2ND PARTY shall be responsible for the payment of any and all costs and expenses incurred and arising out of any use of the easement for any of the purposes described and set forth in this agreement including, but not limited to, any cost and expenses incurred in the construction, maintenance and repair of the pavement within that portion of the easement area located on Parcel C.

4. DEVELOPER and 2ND PARTY shall be responsible for the payment of any and all costs and expenses incurred and arising out of the initial construction of the access drive within that portion of the easement

area located on Parcel B. DEVELOPER and 2ND PARTY shall each pay one-half (1/2) of the costs and expenses of construction of said access drive. DEVELOPER shall construct said access drive within the easement area on Parcel B up to the western property line of said parcel concurrent with the construction of the _____ (*name of development)* at Delta shopping center. 2ND PARTY shall reimburse DEVELOPER for its portion of the costs of construction upon completion of said access drive on Parcel B.

5. Each party shall separately operate the easement area located on their respective parcels and shall maintain the same in good condition and repair at their own cost and expense so long as such easement area shall exist.

This document drafted on _____ by:

_____
_____
_____
_____
_____

Sample provided by Delta Charter Township, Eaton County, Michigan.

IN WITNESS WHEREOF, _____and _____ the _____ and _____, respectively, of _____ Development Company, Inc. have hereunto set their hands on the date affixed hereto.

Witnessed by: _____ Development Company, Inc.

_____
Date Date
Its:

_____
Date Date
Its:

STATE OF)ss
)ss

COUNTY OF)ss

On this _____ day of_____, 200__ before me personally appeared_____ and _____ the _____, and_____, respectively, of _____ Development Company, Inc. to me known as the persons who executed the foregoing instrument and acknowledged the same to be their own free act and deed.

Notary Public, _____County,
Acting in _____ County,
My Commission Expires:

IN WITNESS WHEREOF, _____and _____ the _____ and _____, respectively, of 2ND PARTY have hereunto set their hands on the date affixed hereto.

Witnessed by: 2ND PARTY

_____
Date Date
Its:

_____
Date Date
Its:

STATE OF)ss
)ss

COUNTY OF)ss

On this _____ day of_____, 200__ before me personally appeared_____ and _____ the _____, and_____, respectively, of 2ND PARTY to me known as the persons who executed the foregoing instrument and acknowledged the same to be their own free act and deed.

Notary Public, _____County,
Acting in _____ County,
My Commission Expires:

IN WITNESS WHEREOF, Representatives of the Charter Township of Delta have hereunto set their hands on the dates affixed hereto.

Witnessed by: DELTA CHARTER TOWNSHIP

_____
Date Date

Its: Supervisor

_____
Date Date

Its: Supervisor

STATE OF MICHIGAN)ss
)ss

COUNTY OF EATON)ss

On this _____ day of_____, 200__ before me personally appeared_____ to me known to be respectively the Supervisor and Clerk of Delta Charter Township, who acknowledged that they executed the foregoing instrument of their own free act and deed in behalf of the Charter Township of Delta.

Notary Public, _____County,
Acting in _____ County,
My Commission Expires:

LOCAL HIGHWAY SAFETY STUDIES

(LHSS)

U.S. Department of Transportation
Federal Highway Administration

USERS' GUIDE

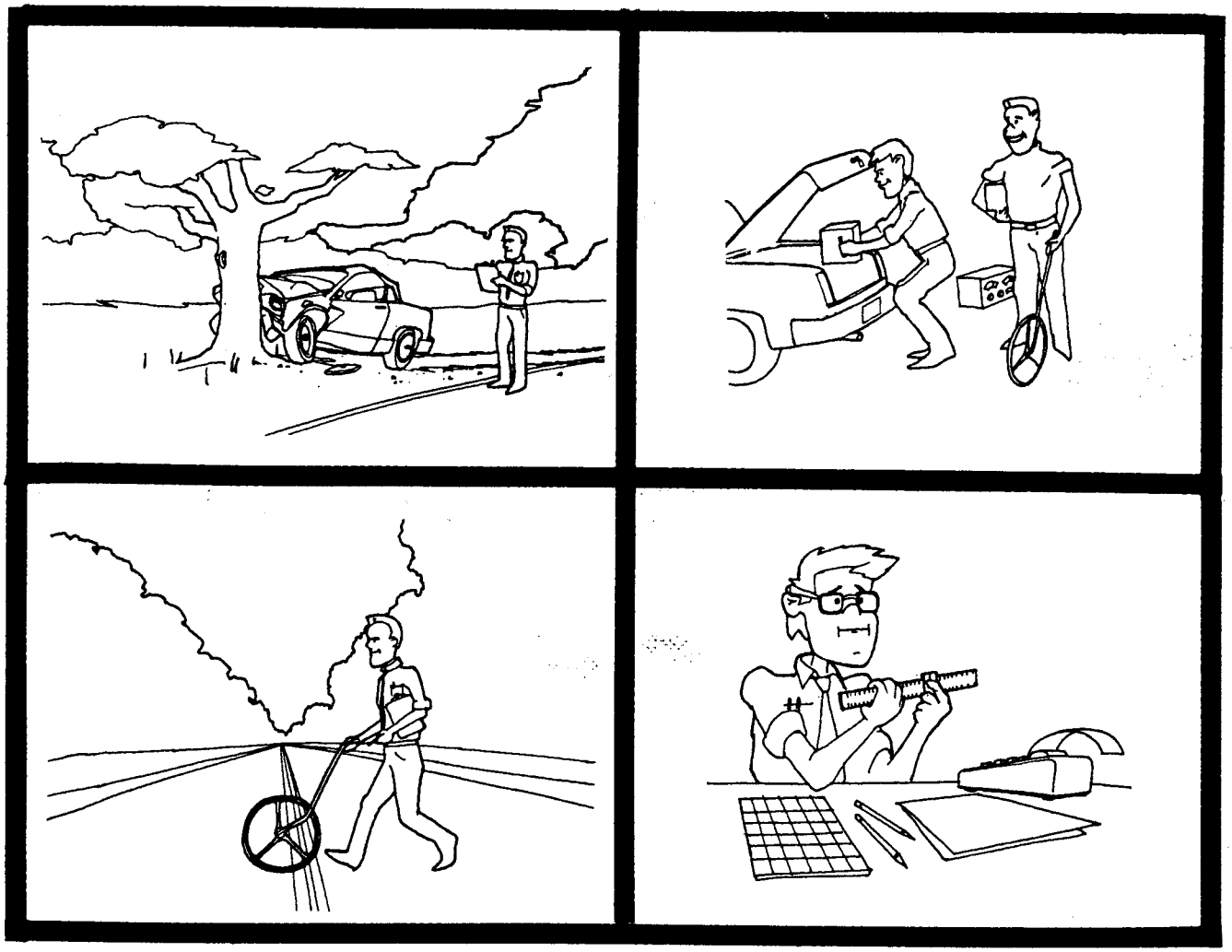

July 1986

Step 1, Activity 3 - Summarize Accident Data

A summary of accident characteristics can provide the first indication of possible safety deficiencies. Since the prime purpose of the summary is to identify possible safety problems and direct field data collection efforts, the summary should only include those accidents that have been identified as occurring at the specific location or within the predefined area of influence. For example, intersection analyses typically include all accidents that occur on all approaches to a distance of 250 feet from the intersection's midpoint. Analyses of specific locations typically include all accidents reported as occurring within a tenth of a mile from the spot being analyzed. If a roadway segment is, therefore, being analyzed and more than one accident has occurred at a number of spots on the segment, it will be necessary to perform a separate accident summary for each accident spot. If separate summaries are not conducted for each roadway spot, then the analysis of accident characteristics will not yield correct information.

An example of a completed accident summary form is presented in figure 2. This particular form (blank forms are contained in appendix A) is structured to accommodate three years of data and provides summaries for the type of accident, pavement condition, light condition, and accident severity. Note that the last type of accident included in figure 2 pertains to the northbound to westbound left turn accidents. This was a particular accident type that was appropriate for the intersection being analyzed (i.e., Case Study 1). The accident types included on the blank summary forms are the types that are customarily encountered during a safety analysis. Additional accident types should be used if required by the particular site being analyzed.

Accident summaries by type, pavement condition, light condition, and severity are the primary characteristics that require analysis. As a minimum, these characteristics should be summarized whenever accidents are being analyzed. Time of day and contributing circumstances are two additional summaries that can be used to help direct data collection activities. An identification of the time of day at which the majority of accidents, or certain accident types, occur can be accomplished by investigating the collision diagram that is described in Activity 4, without performing a separate summary.

A summary of contributing circumstances is obtained from the verbal description noted on the accident report. The contributing circumstances can be categorized as driver-related, vehicle-related, and/or environment-related. One advantage resulting from this type of analysis is that it permits a separation of "correctable" and "noncorrectable" accidents. A circumstance is labeled correctable if highway safety improvements could effectively reduce future accidents. It is labeled noncorrectable if it is unlikely that physical improvements would be effective in reducing similar accidents.

If the accident analysis is being performed on roadway locations that have very few recorded accidents, then an accident summary is not neces-

SUMMARY OF ACCIDENT CHARACTERISTICS

Location: INTERSECTION OF CHAD & SHANE ROADS

	1983 No.	1984 No.	1985 No.	Total No.	Total %
Type of Accident					
Opposing Left Turn	0	1	1	2	14
Rear-End	0	0	1	1	7
Angle	1	1	2	4	29
Sideswipe	0	0	0	0	0
Pedestrian	0	0	0	0	0
Head-On	0	0	0	0	0
Driveway-Related	0	1	0	1	7
Fixed Object	0	1	0	1	7
Others LEFT TURNS NB TO WB	2	1	2	5	36
Pavement Condition					
Wet	1	1	1	3	21
Dry	2	3	5	10	71
Snowy-Icy	0	1	0	1	1
Light Condition					
Day	2	3	4	8	57
Dawn or Dusk	0	1	1	3	21
Night	1	1	1	3	21
Accident Severity					
Fatal Accidents (No. of Persons)	0	0	1(1)	1(1)	7
Injury Accidents (No. of Persons)	2(2)	4(5)	4(5)	10(12)	72
Property Damage Accidents	1	1	1	3	21
TOTAL ACCIDENTS (INJURIES)	3(2)	5(5)	6(5)	14(12)	

* Due to rounding percentage may not equal 100 percent.

Figure 2. An example summary of accident characteristics.

sary. All of the characteristics required for the analysis of low accident frequency locations can be presented on a collision diagram as discussed during the next activity.

Step 1, Activity 4 - Construct Collision Diagram

Collision diagrams are used to identify similar accident patterns. They provide information on the type and number of accidents and conditions (time of day, day of week, etc.) existing when the accident occurred. They show the direction of travel, approximate location, and additional information pertaining to each accident.

To prepare the collision diagram, first arrange the accident reports by year and accident type for the entire analysis period. Do not include any accidents that occurred after significant site changes, such as construction or changes to traffic control devices.

Sketch the location diagram using either the intersection or the universal collision diagram forms included in appendix A. The sketch of the location geometrics need not be to scale, but should provide sufficient room to show the path of each vehicle involved in an accident. Place a north arrow in the proper orientation, label the roadway(s) and complete the location identification and period of analysis on the bottom of the form. Notice that the example diagram presented in figure 3 contains three years of accident data. It is easier to recognize accident patterns if the entire analysis period can be included on one collision diagram. If, however, there are too many accidents to include on one diagram, then one or two years of data can be presented on an additional diagram.

Sketch the path of each vehicle on the collision diagram to indicate vehicle maneuver, type of collision, and accident severity. Include for each accident the following:

- Time of day
- Day of week
- Date
- Light condition
- Pavement condition

The above list represents the minimal amount of data that should be included on the collision diagram. Additional information such as the number of injuries or fatalities for each accident, contributing circumstances, and type of traffic control devices present may also be included. Some agencies include noninvolved vehicles, represented as a dashed line, on the collision diagram. This information, obtained from the verbal description of the accident and the witness statements, is a good method of designating when a noninvolved vehicle was a contributing circumstance to the accident.[7]

If analysis is being performed on a highway segment of considerable length it is often easier to take copies of the accident reports to the site and construct the collision diagram during the field review. Con-

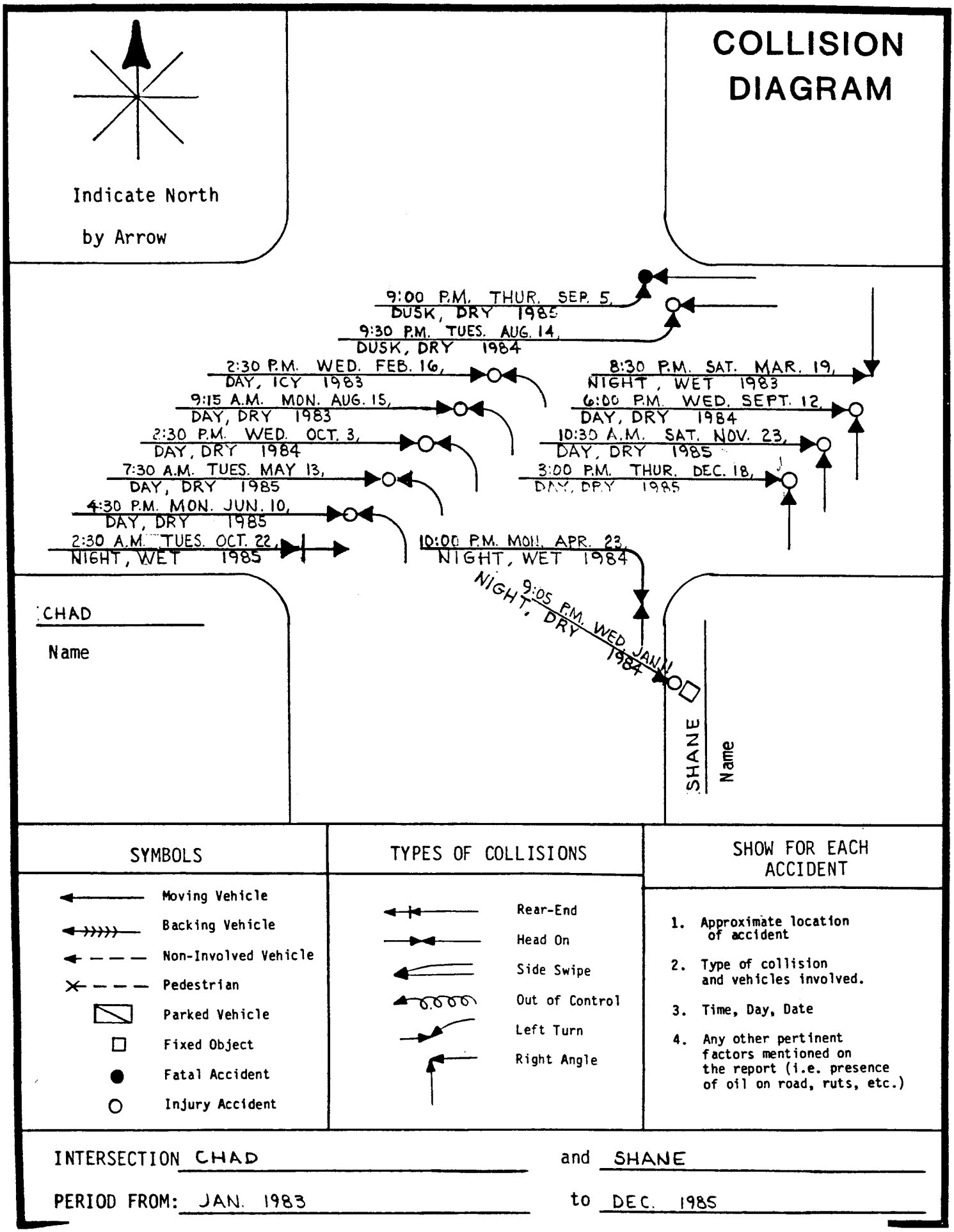

Figure 3. An example collision diagram.

structing the collision diagrams during the field review will permit, for example, the location of fixed-object accidents where fixed objects actually exist. If the number of accidents are small or distributed over the length of the roadway segment the collision diagram can be included on a copy of the condition diagram (described on page 28). Placing the accidents on the condition diagram was the method used to construct the collision diagram of Case Study 3.

Step 1, Activity 5 - Analyze Accident Data

Investigate the summary of accident characteristics and the collision diagram to identify accident patterns and possible safety deficiencies. From figures 2 and 3 it is evident that the majority of accidents involve eastbound and northbound vehicles in right-angle accidents and in left turn maneuvers by the northbound vehicles. Figure 2 also indicates that the majority of accidents occur during daylight conditions and on dry pavement.

There will be occasions when the accident frequency is either too small to establish patterns or when accident patterns simply do not exist. If accident patterns cannot be identified the collision diagram can be useful in identifying the predominate direction of travel. The collision diagram in figure 3 indicates that 9 of the 14 accidents involved northbound and eastbound vehicles and that eastbound vehicles were involved in all of the accidents. Similarly, the narrow bridge example of Case Study 2, presented as figure 4, only involved four accidents during the three year analysis period. Three of the four accidents, however, involved southbound vehicles. The information provided by the collision diagram of Case Study 2, is limited but it may indicate a problem with southbound vehicles that needs further analysis.

Another method that can be used to identify possible problem areas is to perform a comparison between site and areawide accident characteristics. This is especially informative when trying to determine if an abnormal number of night, wet pavement, and personal injury or fatal accidents have occurred. Ideally, this type of comparison should be performed between a group of roadways that have similar traffic, physical, geometric, operational and traffic control features as those present at the analysis site. Accident data obtained from similar sites within the same area as the study site would be most appropriate. If this data is not available, however, statewide averages can often be used. Most State highway departments have the capability of providing not only average accident rates but average rates for the various classes of roadways. If the accident experience exceeds the area or statewide average, then a problem exists. For example, figure 2 indicated that there was a dawn/dusk accident percentage of 21 percent. At first impression this percentage does not appear to be excessively high. Comparisons performed in Case Study 1, however, determined that the dawn/dusk accident experience at the analysis site exceeded the statewide average by 16 percent.

Caution must be exercised in using statewide averages from States that have a wide diversity of terrain or environmental conditions. When these conditions exist, the accuracy of the estimate can be increased by

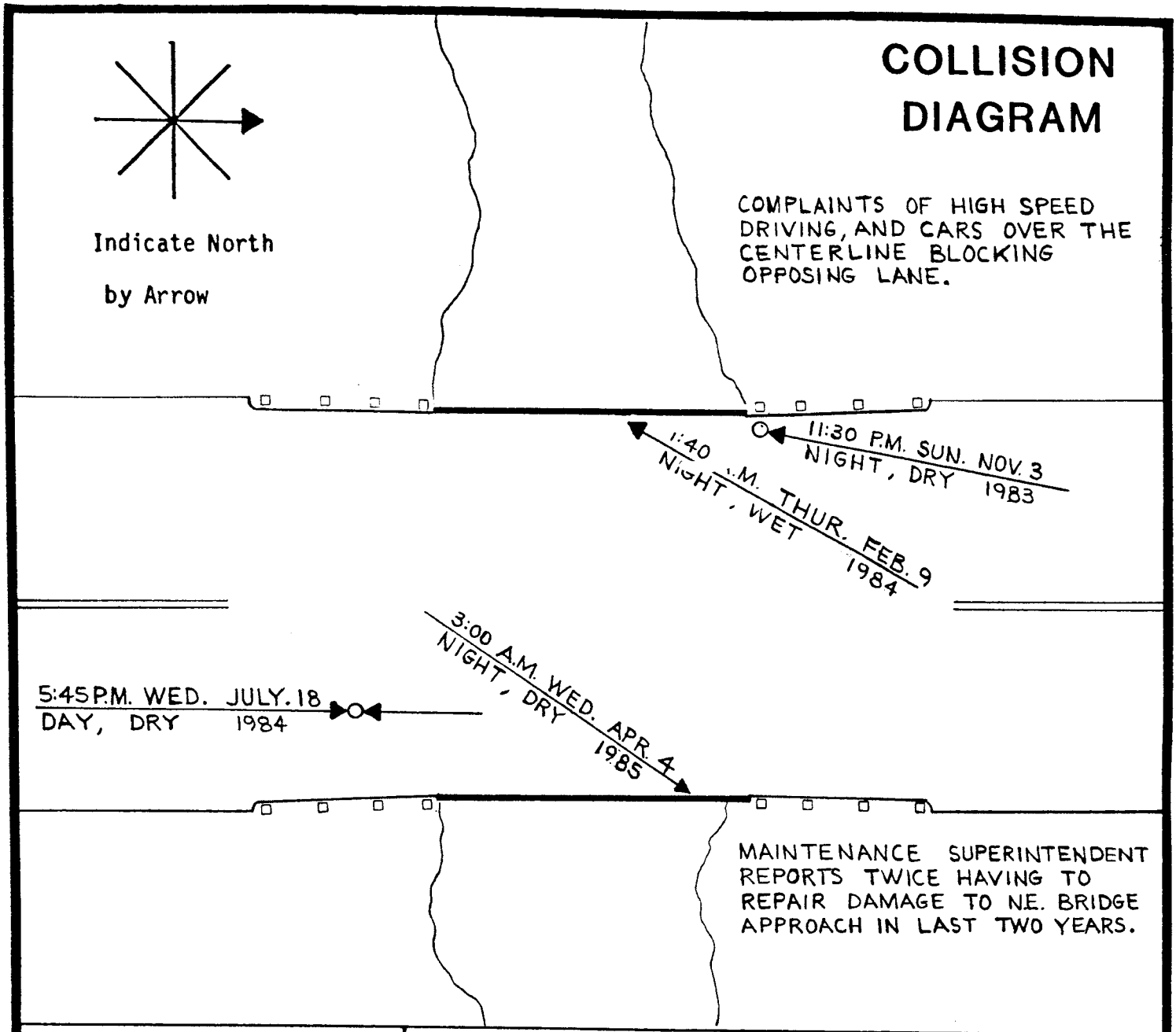

SYMBOLS	TYPES OF COLLISIONS	SHOW FOR EACH ACCIDENT
Moving Vehicle	Rear-End	1. Approximate location of accident
Backing Vehicle	Head On	2. Type of collision and vehicles involved.
Non-Involved Vehicle	Side Swipe	3. Time, Day, Date
Pedestrian	Out of Control	4. Any other pertinent factors mentioned on the report (i.e. presence of oil on road, ruts, etc.)
Parked Vehicle	Left Turn	
Fixed Object	Right Angle	
Fatal Accident		
Injury Accident		

LOCATION: PRARIE VIEW ROAD AT SHOAL CREEK BRIDGE

PERIOD FROM: JAN. 1983 to DEC. 1985

Figure 4. An example collision diagram for a low accident frequency location.

LEFT TURN PASSING LANE WARRANT

(Based on Total Development)

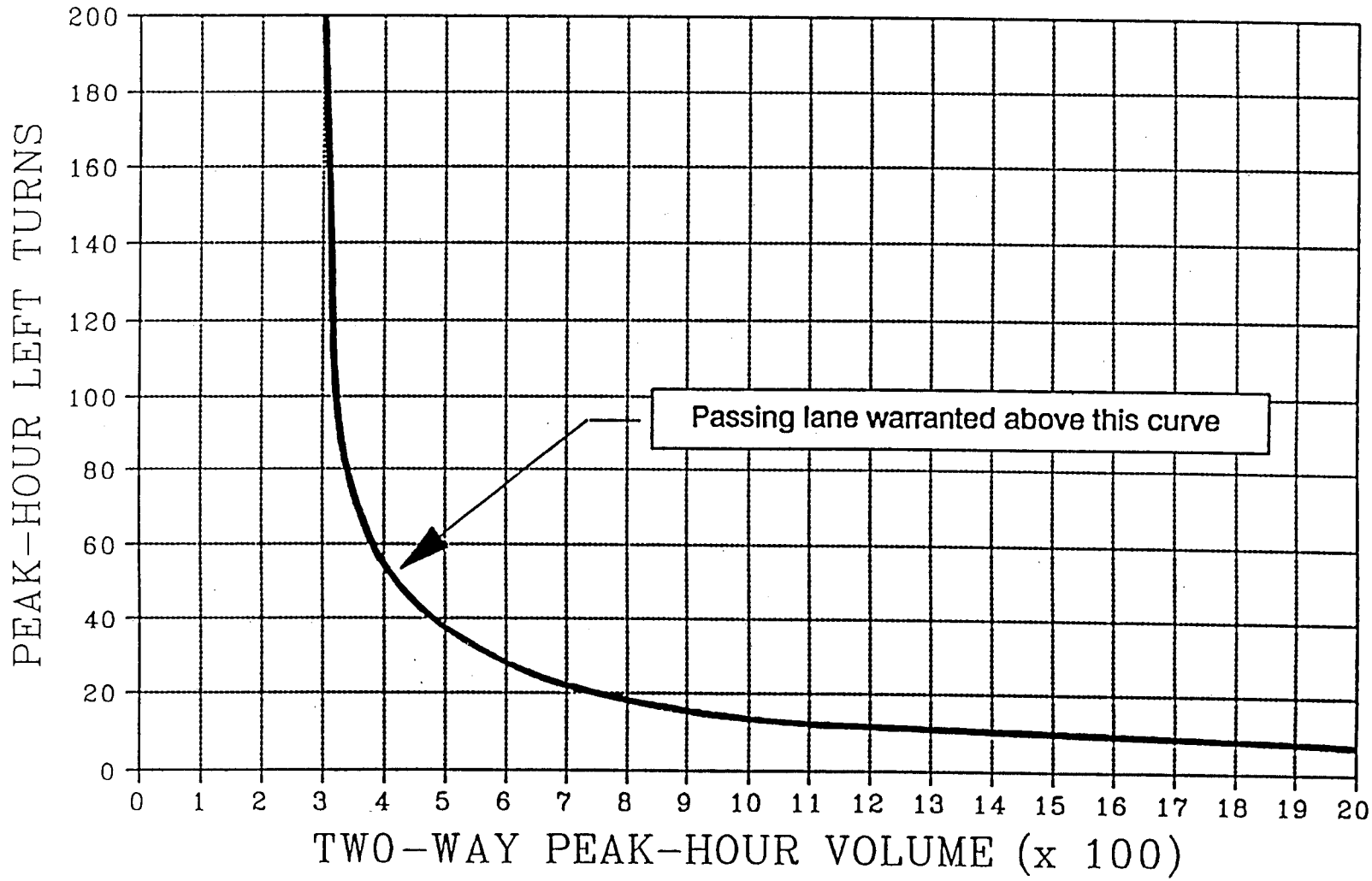

Publication available at:
http://ntl.bts.gov.DOCS/etis

Evaluating Traffic Impact Studies

A Handbook That Outlines:

- ***When*** *Traffic Impact Studies Should Be Required*
- ***What*** *Analyses Should Be Included*
- ***How*** *The Study Should Be Reviewed And Used*
- ***Who*** *Is Qualified To Prepare And Review Impact Studies*

Sponsored By:

- Tri-County Regional Planning Commission
  913 W. Holmes Suite 201 Lansing, Michigan 48910
  (517) 393-0342
- Michigan Department of Transportation
  Planning Division 425 W. Ottawa P.O.Box 30050 Lansing, MI 48909
  (517) 373-2240
- Southeast Michigan Council of Governments
  660 Plaza Drive Suite 1900 Detroit, Michigan 48226
  (313) 961-4266

Prepared By:

- **McKenna Associates, Inc.**
- **The WBDC Group**
- With assistance from: Foster, Swift, Collins and Smith, P.C.
  Francine Cullari, Attorney at Law
  John Aldridge & Associates

- 1994 -

Evaluating Traffic Impact Studies

Evaluating Traffic Impact Studies
1st Edition Published in 1994
Printed by the Michigan Department of Transportation

For additional copies of this handbook contact:

Tri-County Regional Planning Commission
913 West Holmes
Suite 201
Lansing, Michigan 48910
Phone: (517) 393-0342
Fax: (517) 393-4424

Comments: This edition was prepared using data and sources available at the time the document was developed. Users of this handbook are encouraged to submit written comments which may assist in revising future editions. Comments should be sent to the Tri-County Regional Planning Commission at the above address.

Training: A training presentation on using this handbook is available through a number of organizations. If you have a group which may be interested, contact the Tri-County Regional Planning Commission.

This document was prepared for the Tri-County Regional Planning Commission in cooperation with the Michigan Department of Transportation and the Southeast Michigan Council of Governments (SEMCOG). Preparation of this document was financed, in part, by funds from the United States Department of Transportation and the Michigan Department of Transportation. The opinions and recommendations expressed in this handbook are those of the authors with input from committee members, and not necessarily those of the United States or Michigan Departments of Transportation.

The Tri-County Regional Planning Commission is an Equal Opportunity/Affirmative Action Employer. Hiring and service to program recipients is done without regard to race, color, religion, national origin, sex, age or handicap.

TRAFFIC AND SAFETY DIVISION NOTE

SUBJECT: **Clear Vision Areas**

ACTIVITY: Outline of MDOT Policy on Rural Clear Vision Areas on All Work Authorized for Design or for Right-of-Way Acquisition

PURPOSE: To Familiarize MDOT Personnel with the Department's Policy Relating to Clear Vision Areas

ORIGINATING UNIT: Geometrics Coordination Unit

INFORMATION: In order to enhance the safe and efficient movement of traffic, the acquisition of certain properties, or portions thereof, at intersection sometimes is necessary. To accomplish that end the MDOT has an established policy which is outlined beginning on the second page of this note.

ACTION REQUIRED: All Traffic and Safety Division personnel should be guided by this note when dealing with matters relating to clear vision areas.

Delete existing note pages 7.1, 7.1-A, and 7.1-B.

IMPLEMENTATION/COMPLETION: This note will become effective immediately following signed approval by the Engineer of Traffic and Safety.

12-21-87
Date

Calvin Roberts
Engineer of Traffic and Safety

POLICY ON RURAL CLEAR VISION AREAS ON NEW AND MAJOR RECONSTRUCTION WORK AUTHORIZED FOR DESIGN OR FOR RIGHT-OF-WAY ACQUISITION

I. Clear vision areas will be obtained at all at-grade intersections of trunklines with other roads or streets in rural areas. For this policy, the following interpretations are made:

   A. Interchange ramps are considered trunkline.

   B. Service roads are considered local roads.

II. Plans shall designate the outlines of clear vision areas in accordance with the current Standard Guide for "Right-of-Way Acquisition (Free Access)" and with this policy.

III. Clear vision areas will not be obtained within urban areas. For this policy, the following interpretations are made:

   A. Urban areas, as determined by the Bureau of Transportation Planning's urban area boundary description and map.

   B. Rural areas contiguous to sections of trunkline where urban conditions exist to the extent that 50 percent or more of the trunkline frontage is occupied by residential, business, or industrial development.

IV. Administrative adjustment of this policy with regard to actual acquisition of the properties may be required only if the following conditions exist:

   A. Where a required clear vision area is occupied by a building or buildings, and right-of-way appraised is $5,000 or more.

   B. Where the property, although vacant of buildings, has a right-of-way appraisal of $5,000 or more.

V. For the cases outlined in IV-A and IV-B, the procedure will be as follows:

   A. In the appraisal stage, these cases will be given priority and will be referred by the Engineer of Engineering Services Division to the Officer of Real Estate.

POLICY ON RURAL CLEAR VISION AREAS (Continued next page)

POLICY ON RURAL CLEAR VISION AREAS (Continued)

B. The Officer of Real Estate will request the Traffic and Safety Division to review each case from a traffic operational and safety standpoint and to recommend one of the following courses of action:

1. Acquire adjusted area.
2. Acquire in accordance with the Standard Design Guide, as shown on plans.
3. Defer acquisition in particular quadrant to future date.
4. Eliminate all clear vision.

C. Upon his approval or adjustment thereof, the Office of Real Estate shall submit such recommendations to the Engineer of Engineering Services Division for appropriate action.

NOTE: This policy was approved by Henrik E. Stafseth, Acting State Highway Director, on December 14, 1967.

TRAFFIC AND SAFETY DIVISION NOTE

SUBJECT: **Roadside Traffic Control Islands**

ACTIVITY: Planning for and Authorizing the Construction of Traffic Control Islands

PURPOSE: To Enhance the Orderly Flow of Traffic Entering and Leaving a Trunkline

ORIGINATING UNIT: Geometric Design Unit

INFORMATION: Roadside traffic control islands should be considered at those locations where it is apparent that their installation will enhance traffic operations and safety.

Situations where roadside traffic control islands should be considered are outlined as follows:

1. The location has a history of traffic accidents which may be susceptible to correction by traffic islands.

2. Accident potential exists, as evidenced by disorganized parking along the roadside where vehicles create conflicts as they move in and out of the traffic main stream.

3. Accidents potential is evidenced by parked cars blocking vision.

4. Vehicles backing onto the highway or making other erratic maneuvers interfere with the smooth flow of traffic.

5. Angle parking persists even though contrary to state law.

INFORMATION (Continued)

ACTION REQUIRED: Transportation Engineers should be guided by this note when planning for and authorizing the construction of traffic control islands. Delete existing note pages 7.2, 7.2a-c.

IMPLEMENTATION/COMPLETION: This note will become effective immediately following signed approval by the Engineer of Traffic and Safety.

June 9, 1992
Date

Robert E Mela
Engineer of Traffic and Safety

INFORMATION (Continued):

6. Vehicular movements to private property in an intersectional area disrupt traffic.

7. Grade differential between the highway and a roadside business requires roadside control to organize movements into a desirable location and path.

8. Driveways are not well defined.

The curb type used in the construction of traffic control islands should be in accordancde with current MDOT guidelines.

Full shoulder should be paved between roadway and island.

NOTE: The attached "Guidelines for Selecting Curb" is for additional information.

TRAFFIC AND SAFETY DIVISION NOTE

Guidelines for Selecting Curb

When curb is needed to provide delineation and control of access at commercial drives and traffic control islands, the following guidelines (Reference: Design Division IM #396R, Dec. 18, 1991) apply. See Standard Plan II-30 series for curb details.

Detail B - Detail B curb and gutter may be used for any design speed where high visibility mountable curbs are desired for traffic control and driveway delineation. Typical usage would be at rural intersections and on the outside of flush shoulders.

Detail C - Detail C curb and gutter may be used where the design speed is less than or equal to 40 mph (35 mph posted), and a barrier curb is desired to help keep vehicles on the roadway. Typical usage would include locations, often urban, where sidewalks or obstacles such as light poles, trees, etc., are located close behind the curb or in parking areas.

Detail D - Detail D curb and gutter may be used at any design speed where drainage control is the main concern and where roadside or traffic control and driveway delineation are not critical concerns.

Detail E - Detail E curb is a barrier type curb used primarily on the backside of traffic control islands, or where a gutter pan is not required.

Detail F - Detail F curb and gutter may be used where a high profile mountable curb is desired and the design speed is less than or equal to 50 mph (45 mph posted). Typical usage would be in areas where Detail C curb and gutter is being replaced or where Detail B or D curb and gutter would not provide sufficient roadside control.

NOTE: The FHWA has advised MDOT that Detail F curb and gutter as shown on Standard Plan II-30D has not been approved for projects with design speeds higher than 50 mph (45 mph posted). Mountable curb and gutter, either Detail B or D, should be specified for such projects.

7.4 HAZARDS OUTSIDE RIGHT OF WAY

Situations may arise where creation of certain types of land use adjacent to the right-of-way may pose a hazard to road users. An abutting landowner may put his land to any use that is lawful. On the other hand, the law does prohibit a landowner from using his land in a manner that would bring about a public nuisance and thereby affect public safety. Moreover, a landowner abutting a highway cannot, through the use of his land, invade the highway right-of-way by smoke, for example, that did not pre-exist the highway at that location.

The State Highway Commission has jurisdiction over all state trunkline highways. It has imposed upon it by law the responsibility of maintaining those state trunkline highways in a manner that will permit safe use of the highways by the traveling public. The Commission is therefore required by law to take whatever steps are necessary to provide adequate protection for the traveling public in the use of that portion of the highway involved. For example, if an abutting landowner operates a stone quarry which may pose a hazard to an errant motorist running out of the road, it is the duty of the Department of State Highways and Transportation to protect the traffic by installing guardrails or other appropriate devices to alleviate the danger.

TRAFFIC AND SAFETY DIVISION NOTE

SUBJECT:	**Warrant for Passing Flares at Driveways**
ACTIVITY:	Evaluating the Need for Passing Flares at Driveways
PURPOSE:	To Promote a Uniform System of Determining Where Passing Flares at Driveways Should be Constructed
ORIGINATING UNIT:	Geometrics Coordination

INFORMATION: Driveways serving large developments frequently generate large numbers of left turns. On two-lane, two-way roadways, this situation can disrupt traffic operations and often makes shoulder maintenance difficult.

To help alleviate the types of problems outlined above, a chart showing the relationship between peak hour left turns and 24-hour volumes has been developed and is included on page 7.3-A of this note. When peak hour left turns and 24-hour volumes fall within the area above and to the right of the trend line, left turn prohibitions are warranted, and a driveway passing flare may be required. If a driveway passing flare is constructed, the entire cost must be borne by the developer. For details on flares see Michigan Department of Transportation Design Guide for Flares and Intersection Radii, VII-650 series.

ACTION REQUIRED: Transportation Engineers should be guided by the provisions of this note when considering the prohibition of left turns at driveways or when reviewing plans and requests to construct driveway passing flares.

Delete existing note page 7.3.

IMPLEMENTATION/COMPLETION: This note will become effective immediately following signed approval by the Engineer of Traffic and Safety.

11-30-80
Date

Calvin Roberts
Engineer of Traffic and Safety

WARRANT FOR DRIVEWAY PASSING FLARES ON TWO-LANE, TWO-WAY ROADWAYS

(BASED ON TOTAL DEVELOPMENT)

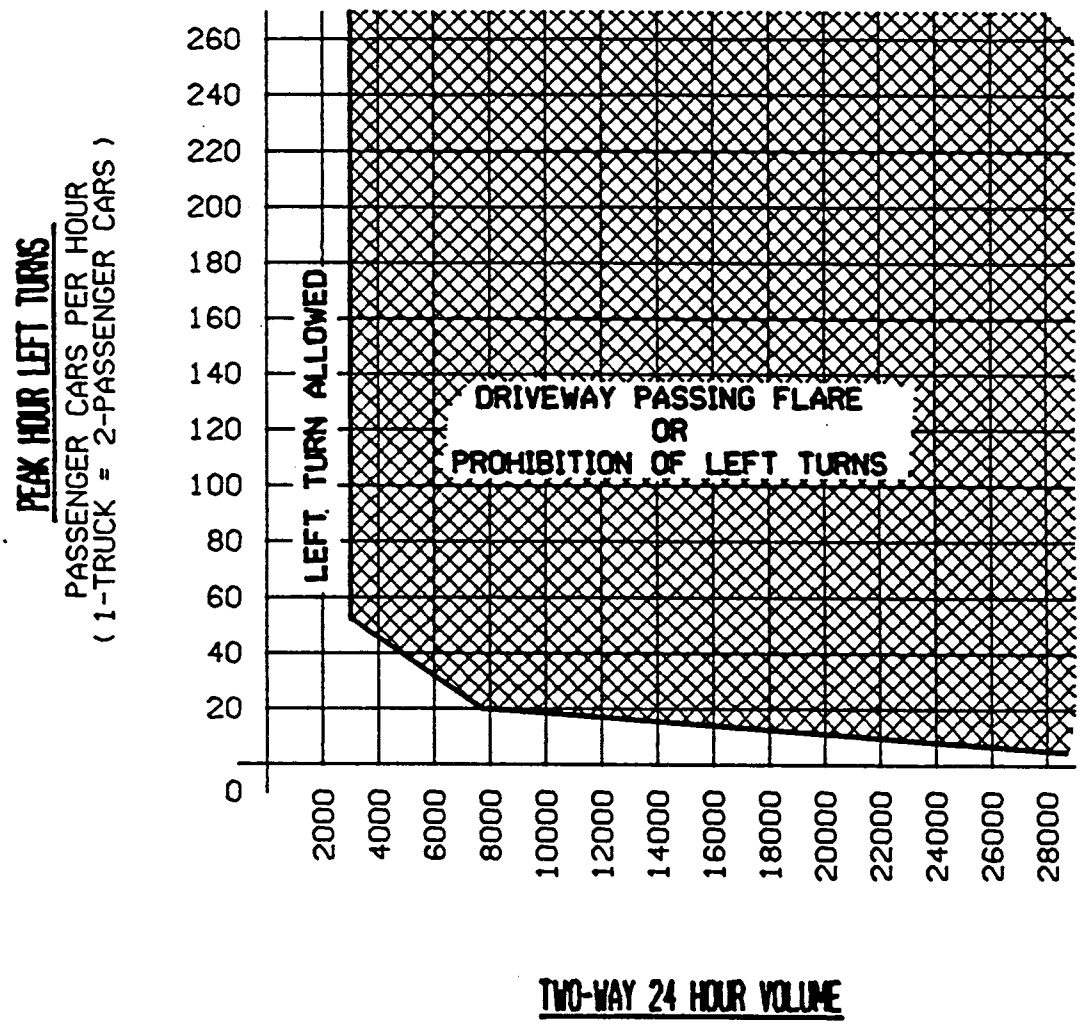

TRAFFIC AND SAFETY DIVISION NOTE

SUBJECT: Traffic Volume Guidelines for Right-Turn Lanes and Tapers

ACTIVITY: Evaluating the Need for Right-Turn Lanes or Tapers at Intersections

PURPOSE: To Promote a Uniform System of Determining when Right-Turn Lanes or Tapers Should be Constructed

ORIGINATING UNIT: Geometric Design Unit

INFORMATION: The addition of right-turn lanes or tapers should be considered to enhance the movement of traffic through intersections. The Michigan Department of Transportation (MDOT) has established traffic volume guidelines which are outlined beginning on page 7.5a of this note.

Page 7.5b gives two charts showing the relationship between peak hour approach volumes and peak hour right-turns. When the intersection peak hour approach volume and peak hour right-turns fall below the lower trend line, radius improvements may be required. If the intersection falls between the two trend lines, taper improvements are recommended. For flare and intersection details, see MDOT Design Guides, VII-650 or G-650 series.

The two charts are taken from the NCHRP Report #279, Intersection Channelization Design Guide.

ACTION REQUIRED: MDOT personnel should be guided by the provisions of this note when scoping projects, reviewing plans or evaluating requests to construction right-turn lanes or tapers.

IMPLEMENTATION/COMPLETION: This note will become effective immediately following signed approval by the Engineer of Traffic and Safety.

Nov 15, 1993 — Date

Robert E Nalu — Engineer of Traffic and Safety

GUIDELINES FOR RIGHT-TURN LANES AND TAPERS

The use of right-turn lanes at intersections can significantly improve operations. Exclusive right-turn lanes should be considered:

1. At any unsignalized intersection which satisfies the criteria in the figure on page 7.5b.

2. At any intersection where a capacity analysis determines a right-turn lane is necessary to meet a desired level of service.

3. At any intersection where the accident experience, existing traffic operations or engineering judgement indicates that a right-turn lane will significantly improve operations.

Traffic Volume Guidelines For Design Of Right-Turn Lanes Or Tapers

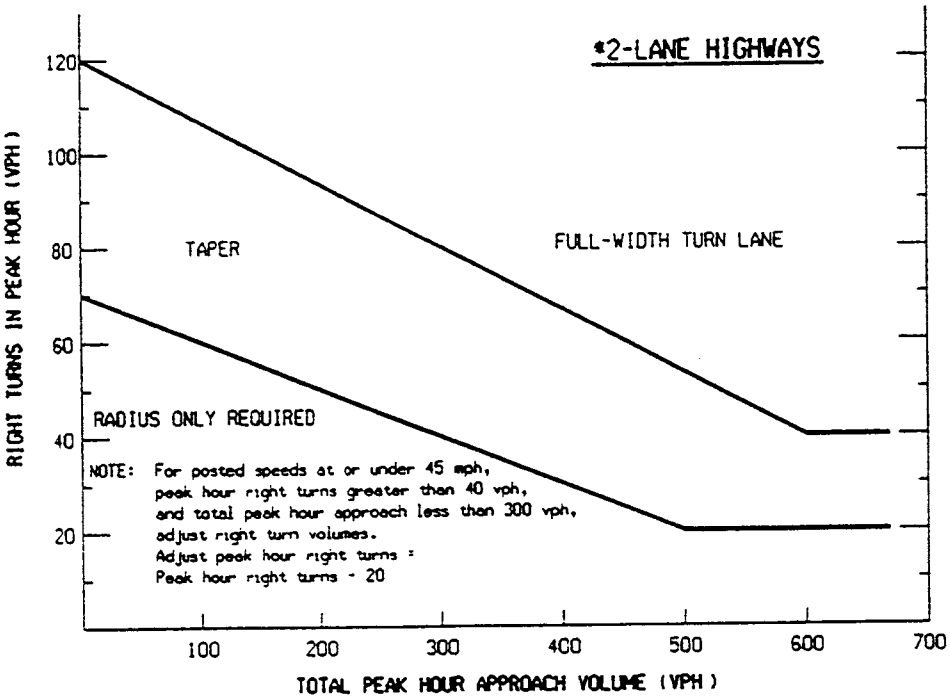

Example:
Design Speed = 55 mph
Peak Hour Approach Volume = 300 vph
Right Turns in Peak Hour = 100 vph

Problem:
Determine if a right turn lane is recommenc

Solution:
Figure indicates that the intersection of 300 vph and 100 vph is located above the upper trend line; thus, a right-turn lane may be recommended.

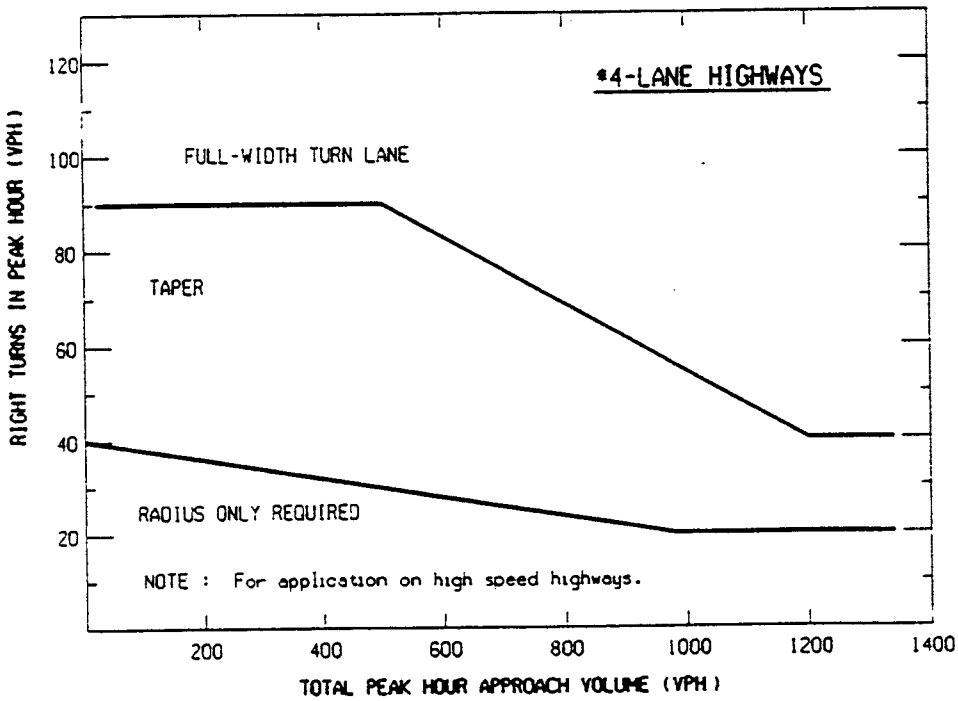

*If a center left-turn lane exists (i.e. 3 or 5 lane highway), subtract the number of left turns in approach volume from the total approach volume to get an adjusted total approach volume.

TRAFFIC AND SAFETY DIVISION NOTE

SUBJECT: **Traffic Volume Guidelines for Left-Turn Lanes and Passing Flares at Unsignalized Intersections**

ACTIVITY: Evaluating the Need for Left-Turn Lanes or Passing Flares at Unsignalized Intersections

PURPOSE: To Promote a Uniform System of Determining Where Left-Turn Lanes or Passing Flares Should be Constructed

ORIGINATING UNIT: Geometric Design Unit

INFORMATION: The addition of left-turn lanes or passing flares should be considered in order to enhance the movement of traffic through intersections. The Michigan Department of Transportation has established guidelines which are outlined beginning on page 7.6a of this note.

The charts on page 7.6b, 7.6c and 7.6d display the relationship between advancing and opposing volumes with respect to left turns on two-lane, two-way highways. For each of the three charts, if the intersection of advancing and opposing volumes falls to the right of the curve representing the percentage of left turns in the advancing volume, a left-turn lane is recommended. If the intersection falls to the left of the curve, a left-turn lane is not recommended. If a left-turn lane is not recommended, see the bottom of page 7.6a to consider the installation of a passing flare. For flare and intersection design details, see MDOT Design Guides, VII-650 or G-650 series. The chart on page 7.6e displays the relation between the left-turning volumes and opposing volumes on four-lane undivided highways. A left-turn lane normally is not warranted if the intersection opposing and left-turning volumes falls in the shaded areas.

Charts are taken from NCHRP Report 279, Intersection Design Guide

ACTION REQUIRED: MDOT personnel should be guided by the provisions of this note when scoping projects, reviewing construction plans, site plans and driveway permits, or evaluating requests to construct left-turn lanes or passing flares.

Delete existing note pages 7.6, 7.6a-7.6c (11-15-93).

IMPLEMENTATION/COMPLETION: This note will become effective immediately following signed approval by the Engineer of Traffic and Safety.

2-18-1998
Date

John A. Oxtoby
Engineer of Traffic and Safety

GUIDELINES FOR LEFT-TURN LANES ON TWO-LANE, TWO-WAY HIGHWAYS AND FOUR-LANE UNDIVIDED HIGHWAYS

The accommodation of left turns is often the critical factor in proper intersection design. Left-turn lanes and passing flares can significantly improve safety and the level of service at an intersection. Exclusive left-turn lanes should be considered:

1. At any unsignalized intersection on a two-lane urban or rural highway which satisfies the criteria on pages 7.6b, 7.6c, or 7.6d.

2. At any unsignalized intersections on a four-lane urban or rural highway which satisfies the criteria on page 7-6e.

3. At any intersection where the crash experience, traffic operations, sight distance restrictions (e.g., intersection beyond a crest vertical curve), or engineering judgment indicates that a left-turn lane will significantly improve operations.

However, if a left-turn lane is not recommended, a passing flare should be considered. Passing flares are discussed in Traffic and Safety Division Note 7.3, "Warrants for Passing Flares at Driveways."

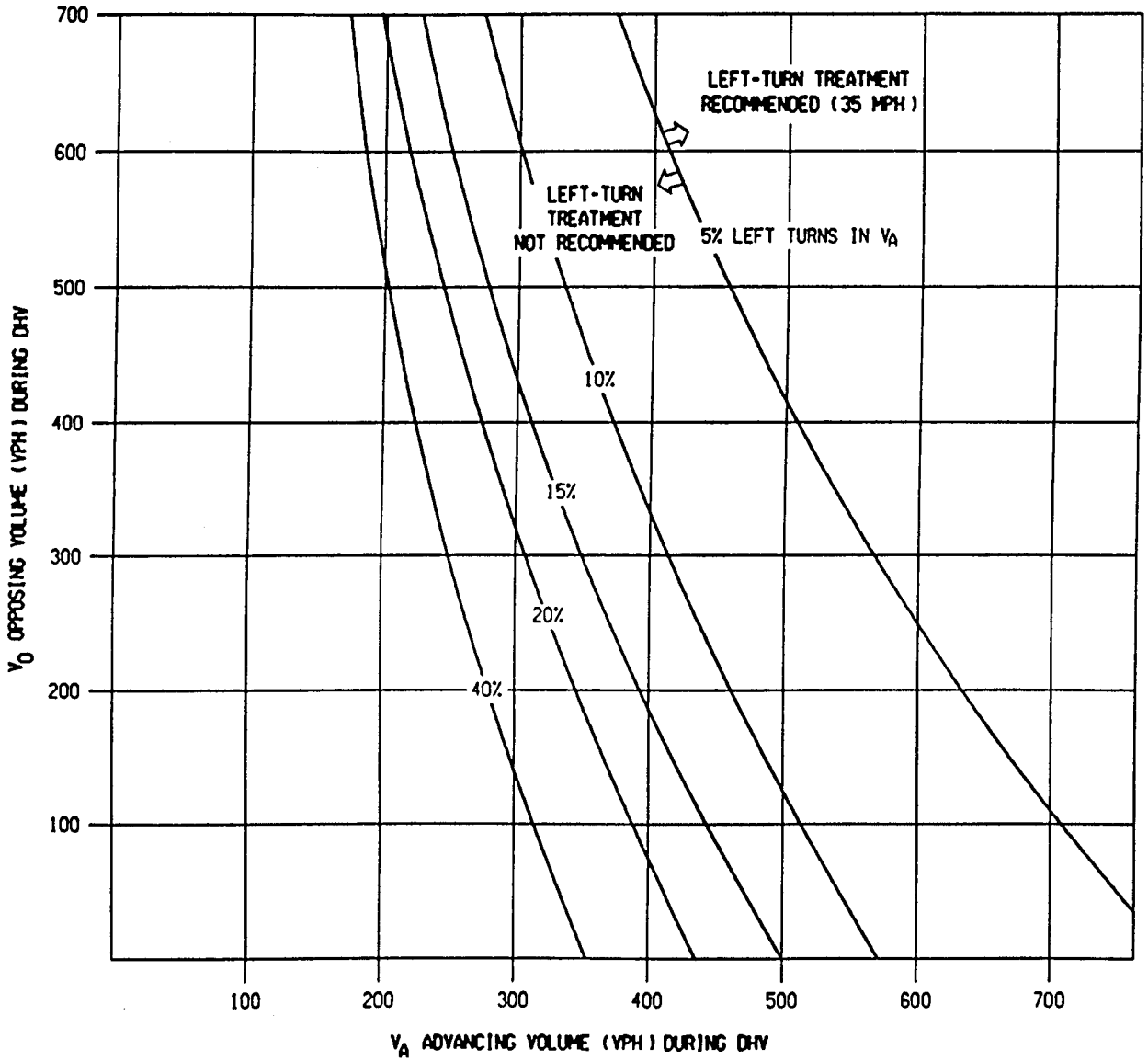

Instructions:

1. The family of curves represent the percentage of left turns in the advancing volume (V_A). The designer should locate the curve for the actual percentage of left turns. When this is not an even increment of 5, the designer should estimate where the curve lies.

2. Read V_A and V_O into the chart and locate the intersection of the two volumes.

3. Note the location of the point in #2 relative to the line in #1. If the point is to the right of the line, then a left-turn lane is recommended. If the point is to the left of the line, then a left-turn is not recommended based on traffic volumes.

<u>Example:</u> Speed = 35mph
Advancing volume during DHV = 400vph
Opposing volume during DHV = 400vph
Percentage of left-turns in advancing volume = 7%

<u>Problem:</u> Determine if left-turn lane is recommended.

<u>Solution:</u> Figure indicates that the intersection of 400vph and 400vph is located to the left of the 7% curve (estimated); thus a left-turn lane is not recommended based on volumes.

TRAFFIC VOLUME GUIDELINES FOR LEFT-TURN LANES AT UNSIGNALIZED INTERSECTIONS ON TWO-LANE HIGHWAYS (POSTED SPEED 35 MPH)

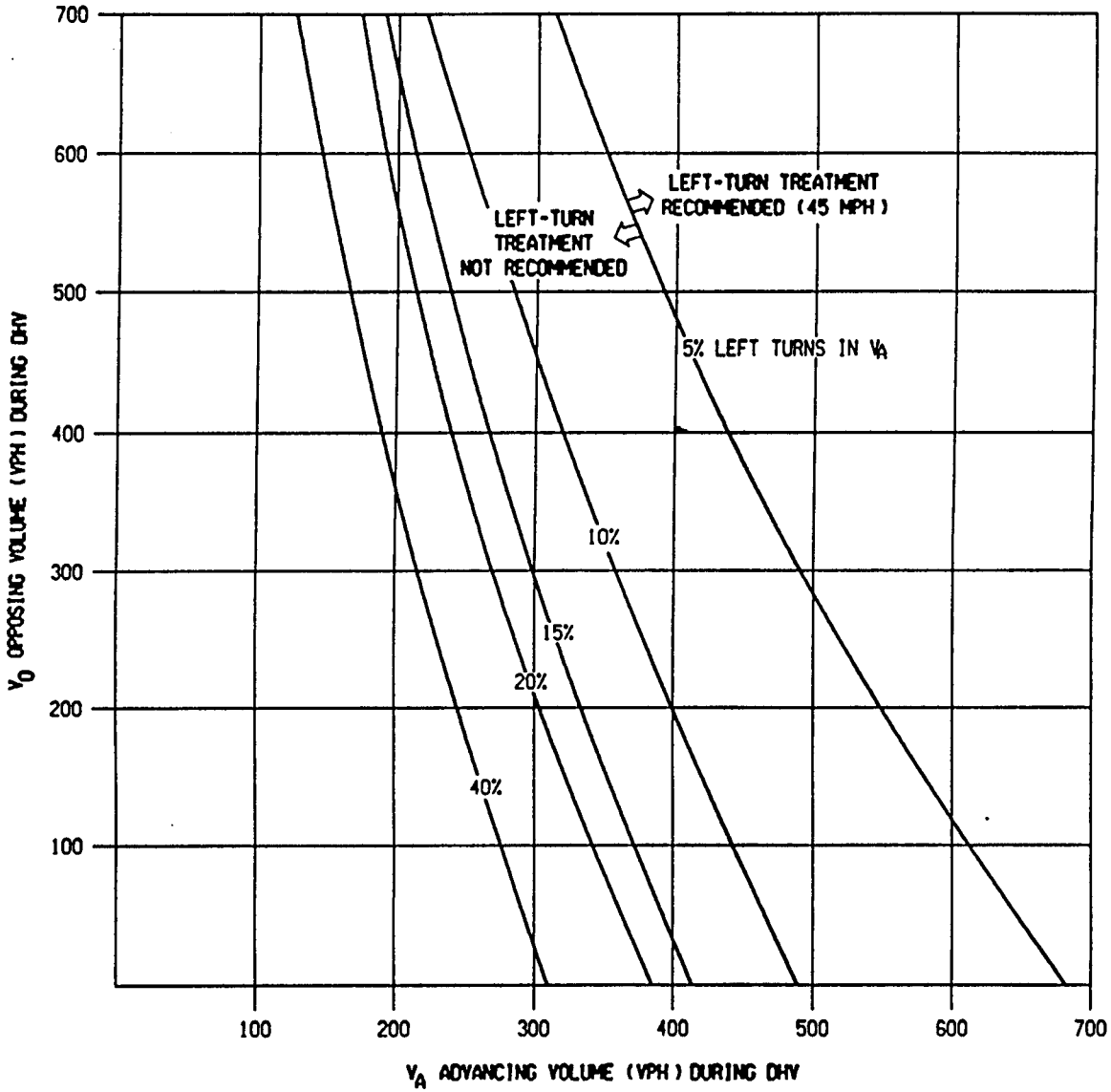

Instructions:

1. The family of curves represent the percentage of left turns in the advancing volume (V_A). The designer should locate the curve for the actual percentage of left turns. When this is not an even increment of 5, the designer should estimate where the curve lies.

2. Read V_A and V_O into the chart and locate the intersection of the two volumes.

3. Note the location of the point in #2 relative to the line in #1. If the point is to the right of the line, then a left-turn lane is recommended. If the point is to the left of the line, then a left-turn is not recommended based on traffic volumes.

TRAFFIC VOLUME GUIDELINES FOR LEFT-TURN LANES AT UNSIGNALIZED INTERSECTIONS ON TWO-LANE HIGHWAYS (POSTED SPEED 45 MPH)

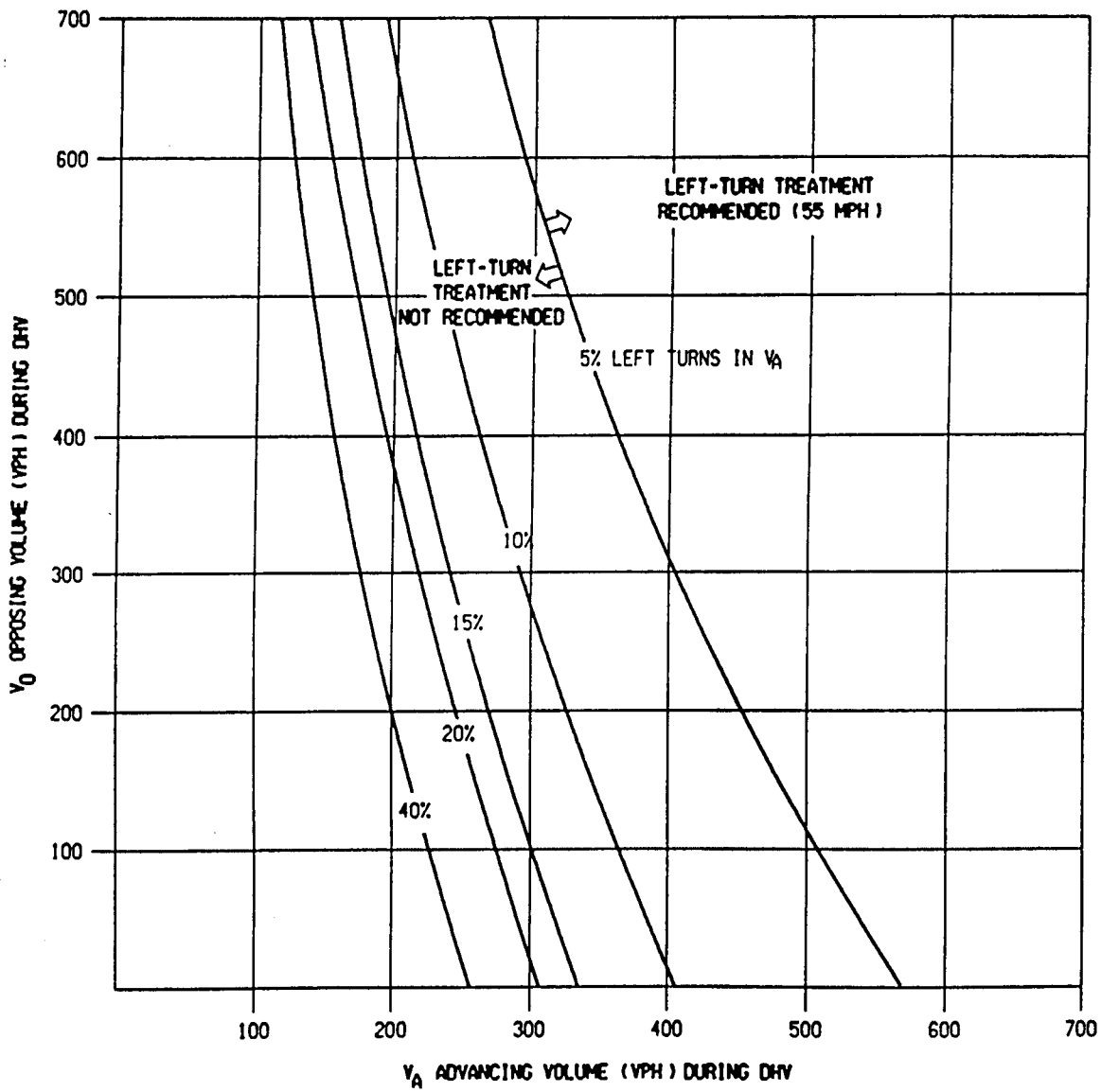

Instructions:

1. The family of curves represent the percentage of left turns in the advancing volume (V_A). The designer should locate the curve for the actual percentage of left turns. When this is not an even increment of 5, the designer should estimate where the curve lies.

2. Read V_A and V_O into the chart and locate the intersection of the two volumes.

3. Note the location of the point in #2 relative to the line in #1. If the point is to the right of the line, then a left-turn lane is recommended. If the point is to the left of the line, then a left-turn is not recommended based on traffic volumes.

TRAFFIC VOLUME GUIDELINES FOR LEFT-TURN LANES AT UNSIGNALIZED INTERSECTIONS ON TWO-LANE HIGHWAYS (POSTED SPEED 55 MPH)

NOTE: WHEN V_o < 400 VPH (dashed line) A LEFT-TURN LANE IS NOT NORMALLY WARRANTED UNLESS THE ADVANCING VOLUME (V_a) IN THE SAME DIRECTION AS THE LEFT-TURNING TRAFFIC EXCEEDS 400 VPH (V_a > 400 VPH).

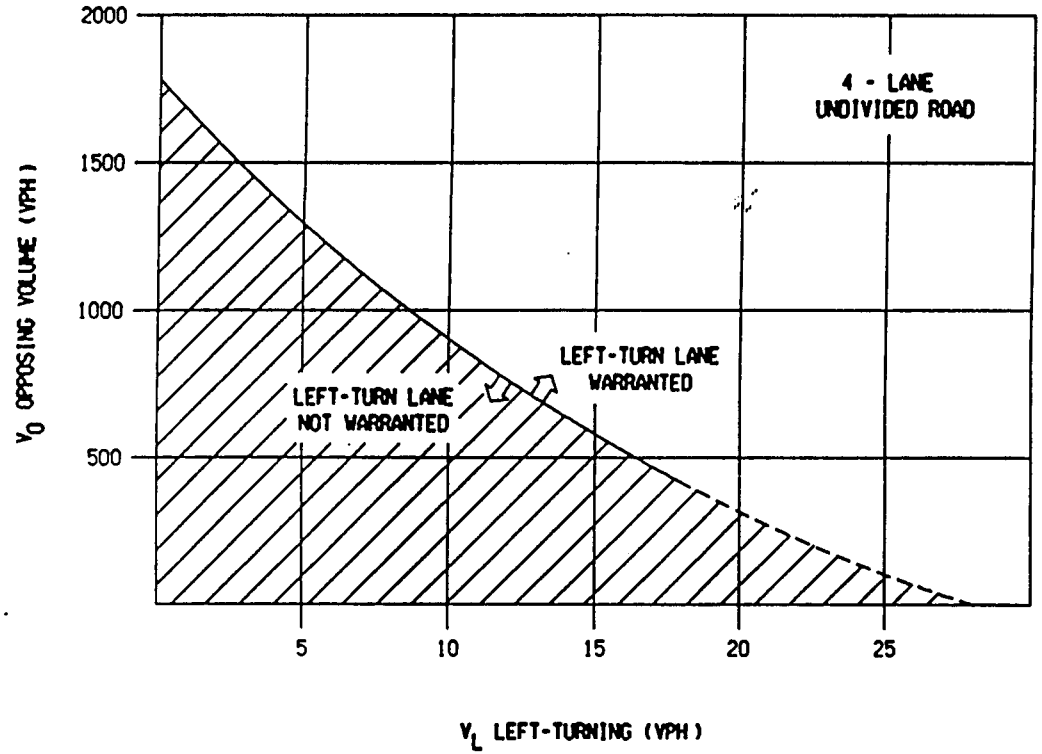

TRAFFIC VOLUME GUIDELINES FOR LEFT-TURN LANES AT UNSIGNALIZED INTERSECTIONS ON FOUR-LANE HIGHWAYS

NOTE: WHEN V_o < 400 VPH (dashed line) A LEFT-TURN LANE IS NOT NORMALLY WARRANTED UNLESS THE ADVANCING VOLUME (V_a) IN THE SAME DIRECTION AS THE LEFT-TURNING TRAFFIC EXCEEDS 400 VPH (V_a > 400 VPH).

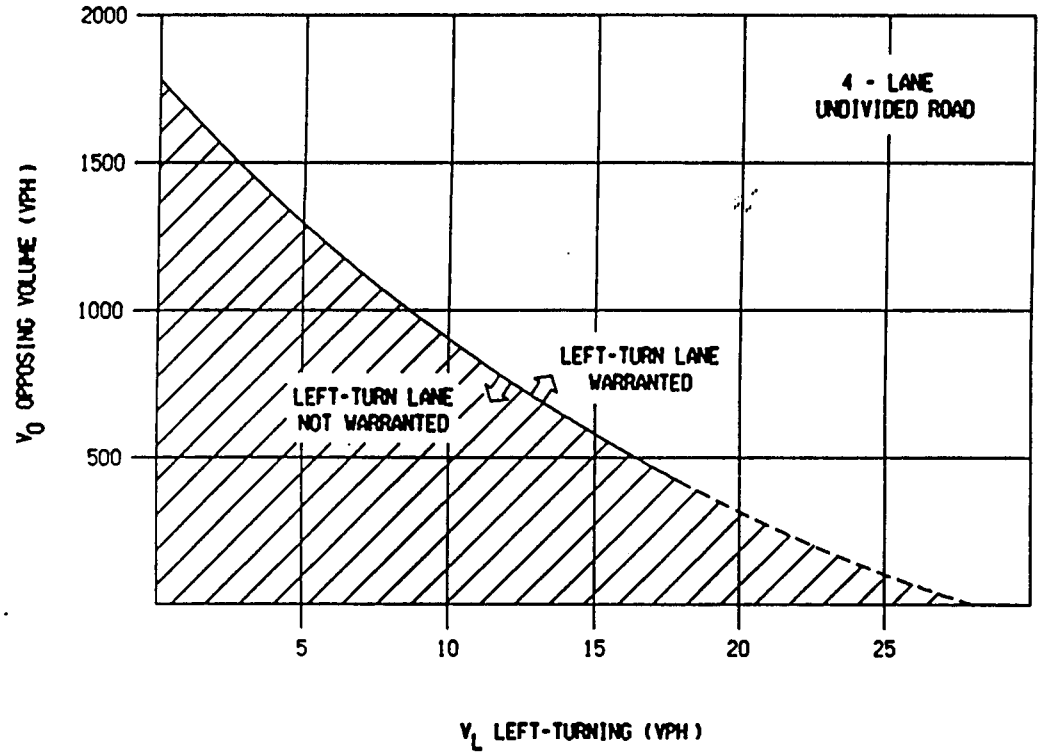

TRAFFIC VOLUME GUIDELINES FOR LEFT-TURN LANES AT UNSIGNALIZED INTERSECTIONS ON FOUR-LANE HIGHWAYS

TRAFFIC AND SAFETY DIVISION NOTE

SUBJECT: **Passing Relief Lanes**

ACTIVITY: Accessing Need, Location, and Design of Passing Relief Lanes

PURPOSE: To Reduce Congestion and Improve Operations along Two-Way, Two-Lane, Rural Highways

ORIGINATING UNIT: Geometric Design Unit

INFORMATION: A passing relief lane, which is either a Truck Climbing Lane (TCL) or a Passing Lane Section (PLS), is intended to reduce congestion and improve operations along two-way, two-lane, rural highways. The congestion (platoon forming) being addressed is the result of: (1) speed reduction caused by heavy vehicles on prolonged vertical grades (TCL), and/or (2) slow moving motorists in combination with high traffic volumes or roadway alignment limiting passing opportunities (PLS). Platoons forming behind slow moving vehicles can be reduced or dispersed by increasing the speed or by increasing the opportunities to pass them. The conditions that cause the forming of platoons also restrict the passing opportunities needed to dissipate platoons, thereby increasing congestion.

The construction of Passing Relief Lanes is not intended to connect existing multilane sections, but to provide a safe opportunity to pass slower vehicles.

Pages 7.7a through 7.7e detail the guidelines.

ACTION REQUIRED: MDOT personnel should be guided by the provisions of this note when evaluating the need, location and design of Passing Relief Lanes.

IMPLEMENTATION/COMPLETION: This note will become effective immediately following signed approval by the Engineer of Traffic and Safety.

11/2/94
Date

Robert E Maley
Engineer of Traffic and Safety

GUIDELINES FOR CONSTRUCTION OF NEW PASSING RELIEF LANES

Definitions:

PRL - "Passing Relief Lane:" common, all-inclusive reference to a traffic lane provided for increasing passing opportunities along a route; can be a Truck Climbing Lane (TCL) or a Passing Lane Section (PLS).

TCL - "Truck Climbing Lane:" an extra lane for heavy vehicles slowed by the presence of a long steep "critical grade," that provides passing opportunities for non slowed vehicles.

PLS - "Passing Lane Section:" extra laneage to provide additional capacity and reduce delay caused by slow moving vehicles, such as recreational vehicles, during peak periods. These are often desirable in areas where slower vehicles are not necessarily the result of long steep grades.

DHV - "Design Hour Volume:" the hourly volume used to design a particular segment of highway.

Critical Grade - The grade and length that causes a typical truck or other heavy vehicle to have a speed reduction of 10 mph (16 km/h) or greater.

Operation

The operation of passing relief lanes should be in accordance with the typical markings and signing as provided by Traffic and Safety Note 1.1.1.5.

Based on needs and criteria, two categories of passing relief lanes are identified and presented in these guidelines.

A. Truck Climbing Lane (TCL)

B. Passing Lane Section (PLS)

Warranting Criteria (PLS)

Initially, design hour volume (DHV) will be used in identifying candidate locations; specific classification counts will be requested when required for comprehensive analysis. FHWA requests that they be advised on any Federal Aid Project in which the 30th high hour is not used as the DHV in warranting a PRL. A combination of the following should be considered in identifying the need for a PLS.

1. Combined recreational and commercial volumes exceed five percent of the total traffic.[1]

2. The level-of-service drops at least one level and is below Level B during seasonal, high directional splits.[1]

3. The two-way DHV does not exceed 1200 vph. In situations where volumes exceed 1200 vph, other congestion mitigating measures should be investigated.

Location Considerations (PLS)

PLS should desirably be located in areas:

1. That can accommodate four lanes (PLS for each direction of traffic) so that the amount of three-lane sections is minimized.

2. With rolling terrain where vertical grades (even though not considered "critical grades") are present to enhance:

   a. Visibility to readily perceive both a lane addition and lane drop.

   b. Differential in speed between slow and fast traffic. This occurs on upgrade locations and produces increased passing opportunities.[3]

   c. Slower vehicles regaining some speed before merging by continuing the PLS beyond the crest of any grade.[3]

3. Relatively free of commercial and/or residential development (driveways) and away from major intersections.[3]

4. Where horizontal curvature does not exceed three degrees.[3] (Metric: Where radius R of the horizontal curve is greater than or equal to 580m.)

5. With no restrictions in width resulting from bridges or major culverts, unless structure widening is done in conjunction with PLS construction.[3]

Location Consideration (PSL)

6. That are farther than 750 feet (230m) from a railroad crossing.[4]

7. Where directional spacing of approximately five miles (8 km) can be maintained.[2]

Design Consideration (PLS)

1. The beginning and ending transition (tapers) areas of a PLS should be located where adequate decision sight distance is available in advance.

2. The added lanes should continue over the crest of any grade so that slower traffic can regain some speed before merging.

3. The beginning or approach taper should be at least 500 feet (150 km) long.

4. The taper length at the end of PLS's should be based on the formula L=W*S, where L is the taper length in feet, W is the width of the lane in feet, and S is the posted speed in miles per hour. In metric, taper length L (km) is approximately 2.25*V, where V is the posted speed in km/h.

5. The lane widths on any PLS should normally be 12 feet (3.6m).[1]

6. PLS shoulders should be as wide as the shoulders on adjacent two-lane sections but no less than four feet (1.2m). Four-foot (1.2m) shoulders shall be limited to areas where wider shoulders are not feasible or environmental concerns prohibit wider shoulders.[1]

7. The desirable minimum length of any PLS is 1.0 mile (1.6 km) with an upper limit of about 1.5 miles (2.4 km).[2,3]

References

Reference 1= A Policy on Geometric Design of Highways and Streets, 1984 by American Association of State Highway and Transportation Officials.

Reference 2= Highway Capacity Manual, 1985, Special Report 209, published by Transportation Research Board, National Research Council.

Reference 3= Low Cost Method for Improving Traffic Operations on Two-Lane Roads, an information Guide by the Federal Highway Administration, 1987.

Reference 4= Michigan Manual of Uniform Traffic Control Devices, 1982, by the Michigan Department of Transportation.

TRAFFIC AND SAFETY DIVISION NOTE

SUBJECT: **Traffic Impact Studies**

ACTIVITY: Evaluating the Need and Requirements for Traffic Impact Studies

PURPOSE: To Define Requirements and Procedures for Traffic Impact Studies

ORIGINATING UNIT: Geometric Design Unit

INFORMATION: A traffic impact study is a complete analysis and assessment of traffic generated by a proposed development, and of the impact on the surrounding transportation system.

A traffic impact study is required for any proposed development expected to generate over one hundred (100) peak hour directional trips. The study shall be completed and sealed by a licensed professional engineer. The attached table on page 7.8C gives examples of land use that is expected to meet or exceed the 100 peak hour directional trip threshold.

District Review:

1. The District Utilities and Permits Section reviews all proposed access plans, then forwards the plans to the District Traffic and Safety Engineer. District Traffic and Safety will notify the Utilities and Permits Engineer if a traffic impact study is required from the developer before the access permit can be issued.

2. The Utilities and Permits Engineer will inform the developer of the required impact study.

INFORMATION (Continued Next Page)

ACTION REQUIRED: Traffic and Safety and Utilities and Permits Engineers shall be guided by this note when evaluating proposed access for traffic generators.

IMPLEMENTATION/COMPLETION: This note will become effective immediately following signed approval by the Engineer of Traffic and Safety.

April 23, 1996
Date

Engineer of Traffic and Safety

INFORMATION (Continued)

A traffic impact study should include:

1. A narrative summary at the beginning of the report, including, but not limited to:

   a. The applicant and project name.
   b. A location map.
   c. The size and type of development.
   d. Generated traffic volumes based on type and size of land use which are compatible with those listed in the Institute of Transportation Engineers - publication, Trip Generation (current edition).

2. Project phasing identifying the year of development activities per phase and proposed access plan for each phase.

3. A transportation system inventory, which describes the physical, functional and operational characteristics of the study area highway system and, where appropriate, locate transit services. The description should provide, where pertinent, data on:

   a. peak-hour volumes (existing and projected)
   b. number of lanes
   c. cross-section
   d. intersection traffic signals and configuration
   e. traffic signal progression
   f. percentage of heavy trucks
   g. adjacent access point locations
   h. jurisdiction
   i. grades

4. Plan showing proposed roadway per phase for each access. Driveway design and roadway improvements shall meet Michigan Department of Transportation standards and guides.

5. Capacity analysis shall be performed at each access point. The Department preference is for McTrans software. Default values shall not be used when actual values are reasonably available or obtainable. The interaction of conflicting traffic movements shall be addressed in the traffic impact study. Any proposed signalized access within ½ mile (0.8 km) of an existing signalized intersection shall be analyzed in coordination with the existing signal timing. A time-space diagram should also be included.

INFORMATION (Continued)

6. A traffic impact study on the trunkline shall be analyzed with and without the proposed development on the existing system, and with the proposed development for both existing and projected traffic volumes.

   The traffic volumes for the devlopment shall assume a total build out.

   The completed analysis shall be summarized in a table showing all the Measures of Effectiveness (MOE) for all of the above conditions.

7. Required operational changes shall be part of the permit approval process.

TABLE
Examples of Land Use Size Thresholds
Based on Trip Generation Characteristics

Land Use	100 Peak Hour Directional	Metric
Residential:		
Single Family	150 units	150 units
Apartments	245 units	245 units
Condominiums/Townhouses	295 units	295 units
Mobile Home Park	305 units	305 units
Shopping Center (GLA)(3)	15,500 sq. ft.	1,440 m^2
Fast Food Restaurant w/drive-in (GFA)	5,200 sq. ft.(4)	480 m^2
Convenience Store w/gas (GFA)(3,5)	1,300 sq. ft. or 5 pumps	120 m^2 or 5 pumps
Banks w/ drive-in (GFA)	4,400 sq. ft.	410 m^2
Hotel/Motel	250 rooms	250 rooms
General Office	55,000 sq. ft. (4)	5,110 m^2
Medical/Dental Office	37,000 sq. ft.	3,440 m^2
Research & Development	85,000 sq. ft.	7, 900 m^2
Light Industrial	115,000 sq. ft.	10,680 m^2
Manufacturing	250,000 sq. ft.	23,225 m^2

NOTES:

1. Rates/equations used to calculate the above thresholds are from Trip Generation, 5th Edition, 1991, by the Institute of Transportation Engineers. This table will likely need updating as future editions provide additional information.
2. For example, a full traffic impact study should be completed (100 peak hour, peak direction trips generated) if 150 or more single family units are proposed for a site.
3. GLA = Gross Leasable Area; GFA = Gross Floor Area.
4. Using AM peak-hour rates/equations would produce a lower threshold. However, adjacent roadway volumes are usually higher during the PM peak hour.
5. Uses both "Service Station with Market" and "Convenience Market with Pumps" data.
6. For further trip generation characteristics of the above land uses, or of other uses not illustrated above, refer to the latest version of Trip Generation.

TRAFFIC AND SAFETY DIVISION NOTE

SUBJECT: **Spacing for Commercial Drives and Streets**

ACTIVITY: MDOT Guidelines for Access Spacing on State Highways

PURPOSE: To Promote a Uniform Practice in Determining Access Spacing

ORIGINATING UNIT: Geometric Design Unit

INFORMATION:

The spacing of access for commercial driveways and streets is an important element in the planning, design, and operation of roadways. Access points are the main location of crashes and congestion. Their location and spacing directly affect the safety and functional integrity of streets and highways.

DISTRICT REVIEW:

The District Utility and Permit Engineer shall forward the site plan and the access request to the District Traffic and Safety Engineer for review. In general, one access point is adequate for a single business. When one-way pair driveways (In-Out) are requested and the inside traffic circulation promotes such operation, these driveways may be considered as a single access point. In some cases multiple access points are requested. In this case, the District Traffic and Safety Engineer may require a traffic impact study from the business owner/property owner to justify the need for the multiple access. A copy of the Traffic Impact Study Note (Traffic Safety Note #7.8) may be sent to the business owner/property owner to outline the traffic analysis needed.

INFORMATION (continued next page)

Action Required: Traffic and Safety and Utilities and Permit Engineers shall be guided by this note when evaluating access location and spacing.

Implementation/Completion: This note will become effective immediately following signed approval by the Engineer of Traffic and Safety.

1/21/97

Date

James W. Culp

Engineer of Traffic and Safety

INFORMATION (Continued)

Unsignalized Access Spacing:

1. Adjacent accesses should be spaced as far apart as on-site circulation allows. In some cases the District Traffic and Safety Engineer may require that the business owner/property owner re-design his site plan, and relocate the access point to meet the desirable spacing distance. Table (1) shows the desirable unsignalized access spacing as a function of posted speed. These distances are based on average acceleration and deceleration considered adequate to maintain good traffic operations. The sight distance at the access points must also be investigated.

Posted Speed (MPH)	Center-to-Center of Access	
	FT	m
25	130	40
30	185	55
35	245	75
40	300	90
45	350	105
50 and above	455	140

Table (1)

INFORMATION (Continued):

1a. **Lack of Sufficient Frontage to Maintain Adjacent Spacing:**

In the event that a particular parcel lacks sufficient frontage to maintain adequate spacing, the District Traffic and Safety and Utility and Permit Engineers have the following options.

a. Choose the next lowest spacing from Table (1). For example, on 30 mph roadway requiring 55m (185 ft.) spacing, the distance may be reduced to no less then 40m (130 ft.) which is the spacing for 25 mph speed.

b. Encourage a shared driveway with the adjacent owners. In such case the driveway midpoint may be located at the property line between two parcels. However, all parties must agree to the joint driveway in writing.

c. Provide an access point to the side street when it is possible.

d. In areas where frontage roads or service drives exist or can be constructed, individual properties shall be provided access to these drives rather than directly to the main highway.

e. After all the above options are exhausted, an access point may be allowed within the property limits as determined by the District Traffic and Safety and the Utility and Permit Engineers.

Intersection Corner Clearance:

AASHTO specifically states that driveways should not be situated within the functional boundary of at-grade intersections. This boundary includes the longitudinal limits of auxiliary lanes. An access point may be allowed within the above boundary if the entire property frontage is located within this boundary. In all quadrants of an intersection access points should be located according to the dimensions shown on page 7.9D.

Conflict Reductions:

Restricting or prohibiting left turns at unsignalized access points aligned across from each other can greatly reduce safety and operational problems. A typical four-legged intersection, such as where two accesses line up across a four-lane roadway, has 36 conflict points. By prohibiting left turns and through movements the number of conflicts can be reduced from 36 to four, as illustrated on page 7.9E.

INFORMATION (Continued)

In cases where these movements cannot be prohibited, as illustrated on page 7.9E, the District Traffic Engineer may choose to offset the access points. Table (2) provides the desirable distances between two access points on the opposite side of the roadway.

Posted Speed MPH	Desirable Offset Distance Between Access Points on Opposite Sides of the Roadway Center-To-Center of Access on Undivided Highways	
	FT	m
25	255	80
30	325	100
35	425	130
40	525	160
45	630	190
50	750	230

Table (2)

Passing Flares at Driveways:

To evaluate the need for passing flares at driveways on two-lane, two-way roadways, refer to Traffic and Safety Note #7.3.

Right-turn Lanes or Tapers at Intersection:

The addition of right-turn lanes or tapers should be considered to enhance the movement of traffic through intersections.

To evaluate the need for right-turn lanes and tapers, refer to Traffic and Safety Note #7.5.

Left-Turn Lanes or Passing Flares at Intersections:

To evaluate the need for left-turn lanes or passing flares at intersections, refer to Traffic and Safety Note #7.6.

SIGNALIZED INTERSECTION CONTROL

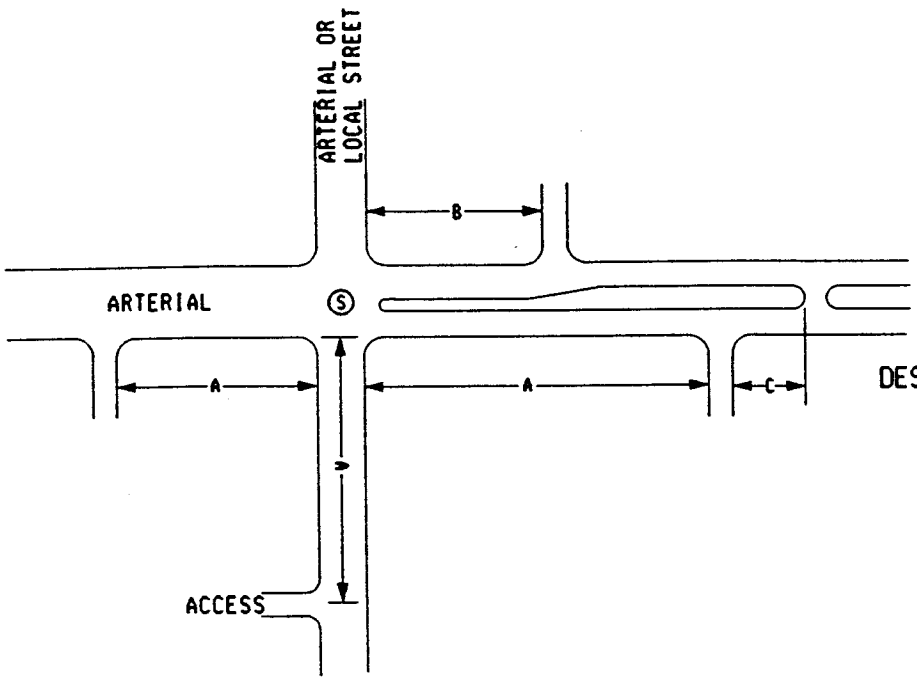

DESIRABLE CORNER CLEARANCES

ITEM	(FT)	(m)
A	230	70
B	115	35
C	75	22

THE ABOVE DIMENSIONS ASSUME A 30 TO 35 MPH POSTED SPEED. FOR A POSTED SPEED OF 40 TO 55 MPH, THESE VALUES SHOULD BE DOUBLED.

COORDINATE WITH THE LOCAL GOVERNMENT AGENCY REGARDING THE LOCAL STREET CLEARANCES.

STOP SIGN INTERSECTION CONTROL

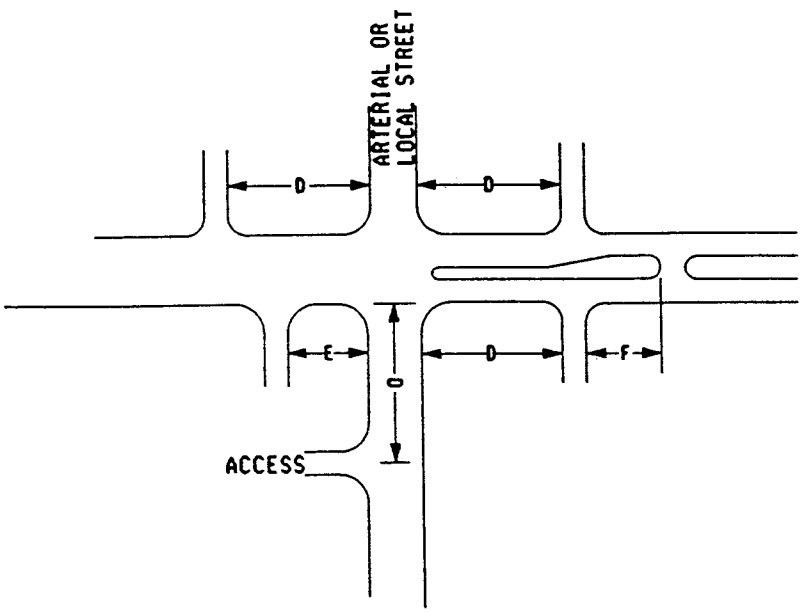

DESIRABLE CORNER CLEARANCES

ITEM	(FT)	(m)
D	115	35
E	85	25
F	75	22

THE ABOVE DIMENSIONS ASSUME A 30 TO 35 MPH POSTED SPEED. FOR A POSTED SPEED OF 40 TO 55 MPH, THESE VALUES SHOULD BE DOUBLED.

COORDINATE WITH THE LOCAL GOVERNMENT AGENCY REGARDING THE LOCAL STREET CLEARANCES.

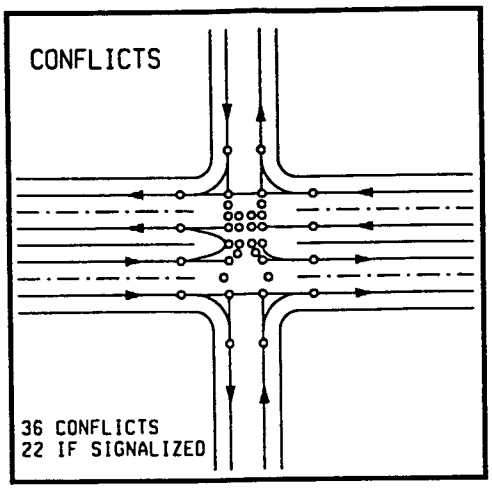

A TYPICAL FOUR-LEGGED INTERSECTION SUCH AS WHERE TWO DRIVEWAYS LINE UP ACROSS A FOR LANE ARTERIAL, HAS 36 CONFLICT POINTS OR 22 IF SIGNALIZED.

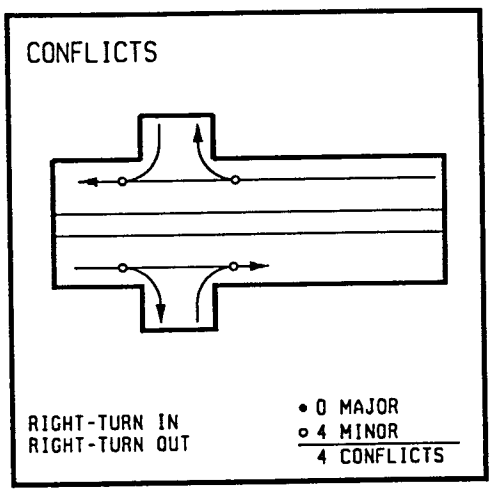

RESTRICTING LEFT TURNS AND THROUGH MOVEMENTS CAN REDUCE THE NUMBER OF CONFLICTS TO FOUR WHICH IS TWO PER ARTERIAL DIRECTION OF TRAVEL.

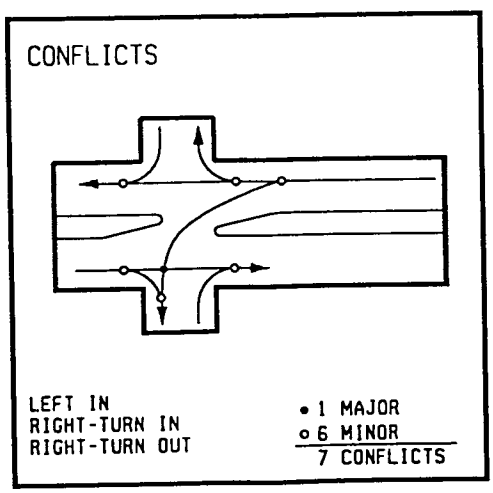

NOTICE THE DISTINCTION BETWEEN MAJOR AND MINOR CONFLICTS. MERGE AND REAR-END CONFLICTS ARE LESS SEVERE THAN CROSSING OR HEAD-ON CONFLICTS. SOMETIMES IT IS APPROPRIATE TO "TRADE" MAJOR CONFLICTS FOR MINOR CONFLICTS.

INFORMATION (Continued):

Access Design:

All access points shall be designed to meet the Michigan Department of Transportation guides, standards and Construction Permit Manual.

Signalized Intersection Spacing

Traffic signal spacing criteria should apply to all intersecting public streets and access drives. They should take precedence over unsignalized spacing standards where there is a potential for signalization. Ideally, locations of signalized intersections should be identified first. Various studies have shown that the number of traffic signals per mile has an even greater influence on travel speeds than the traffic volume per lane. Therefore, selecting a long and uniform signalized intersection spacing is the first essential element in establishing access spacing guides. The variables involved in the planning, design and operation of signalized roadways are reflected in the relationship between speeds, cycle length and signal spacing which yield maximum bi-directional progression band widths.

Thus, a signal timing plan must be able to provide efficient traffic flow with a speed compatible to the roadway posted speed. Table (3) represents the relationship between cycle length, speed and approximate distances between signals for bidirectional progression. The traffic engineer may elect to relocate or consolidate drives in order to meet the spacing in Table 3. Spacing criteria can be relaxed when only one direction of travel is signalized.

Peak Hour	Speed (mph)													
Cycle	25		30		35		40		45		50		55	
Length	Distance													
(sec)	FT	m	FT	m	FT	m	FT	m	FT	m	FT	m	FT	m
60	1,100	335	1,320	400	1,540	470	1,760	540	1,980	600	2,200	670	2,430	740
70	1,280	390	1,540	470	1,800	550	2,050	625	2,310	700	2,500	760	2,820	860
80	1,470	450	1,740	540	2,050	625	2,350	720	2,640	800	2,930	890	3,220	980
90	1,630	500	1,980	600	2,310	700	2,640	800	2,970	900	3,300	1,000	3,630	1,100
120	2,200	670	2,640	800	3,080	940	3,520	1,070	3,960	1,210	4,400	1,340	4,840	1,475

Table 3. Approximate Distances Between Signalized Intersections Needed to Achieve Efficient Bidirectional Progression at Various Speeds and Cycle Lengths

11.3.1 CONSTRUCTION ON HIGHWAY RIGHT-OF-WAY

Department practice concerning construction within highway rights-of-way is as follows:

1. Areas having indiscriminate shoulder and other roadside parking can be controlled by the construction of a single line of barrier-type curb which would supplement the legal parking restrictions involved. This may be at the pavement edge or at the shoulder line, depending on conditions.

2. Established businesses adjacent to a nonlimited access highway, the right-of-way of which is sufficient to permit the construction of insulated parking areas, and having no means of providing parking off the right-of-way, may construct such insulated parking areas. Established business areas are understood to be those that have been operating in the location for five years or more or those for which parking provisions have not been covered by a previously issued permit or agreement. These improvements will be permitted provided the department has no immediate plans to use the right-of-way for widening of the existing surface and that the entire expense is borne by the adjacent property owner or local governmental agency.

3. The construction of the insulated parking areas by the adjacent property owner or local governmental agency shall be covered by a highway department permit which will include the following:

   a. Plan of improvement with prior approval by the department shall be part of the application and permit.

      (1) The plan for the service drive and parking area shall satisfy the following:

         (a) Minimum width of insulating island at pavement edge - ten feet.

         (b) Maximum width of service drive and parking area - 34 feet.

         (c) Desirable minimum width of service drive and parking area - 18 feet. Absolute minimum - 16 feet.

         (d) Minimum width of sidewalk at property line - four feet.

      (2) The design of the island and service drive shall be such that traffic will flow one way in the direction of traffic in the adjacent lanes of the highway.

   b. Construction methods and materials shall meet the department's standards and specifications.

c. The construction indicated above will in no way forfeit the State Highway Commission's right to utilize the right-of-way for highway improvements when required as provided in standard application and permit form.

d. Permission to construct such parking areas will in no way grant to the adjacent property owner or local governmental agency any right of ownership of the right-of-way utilized by the parking area.

e. The adjacent property owner or local governmental agency will not be reimbursed for the construction cost when the parking area is required and removed for highway improvements.

f. Maintenance of the parking area will be the responsibility of the local government or adjacent property owner.

4. All other minor traffic improvements in the roadway, such as crossovers and turning lanes, will be constructed by the department, with participation from the local governmental agency as determined by law.

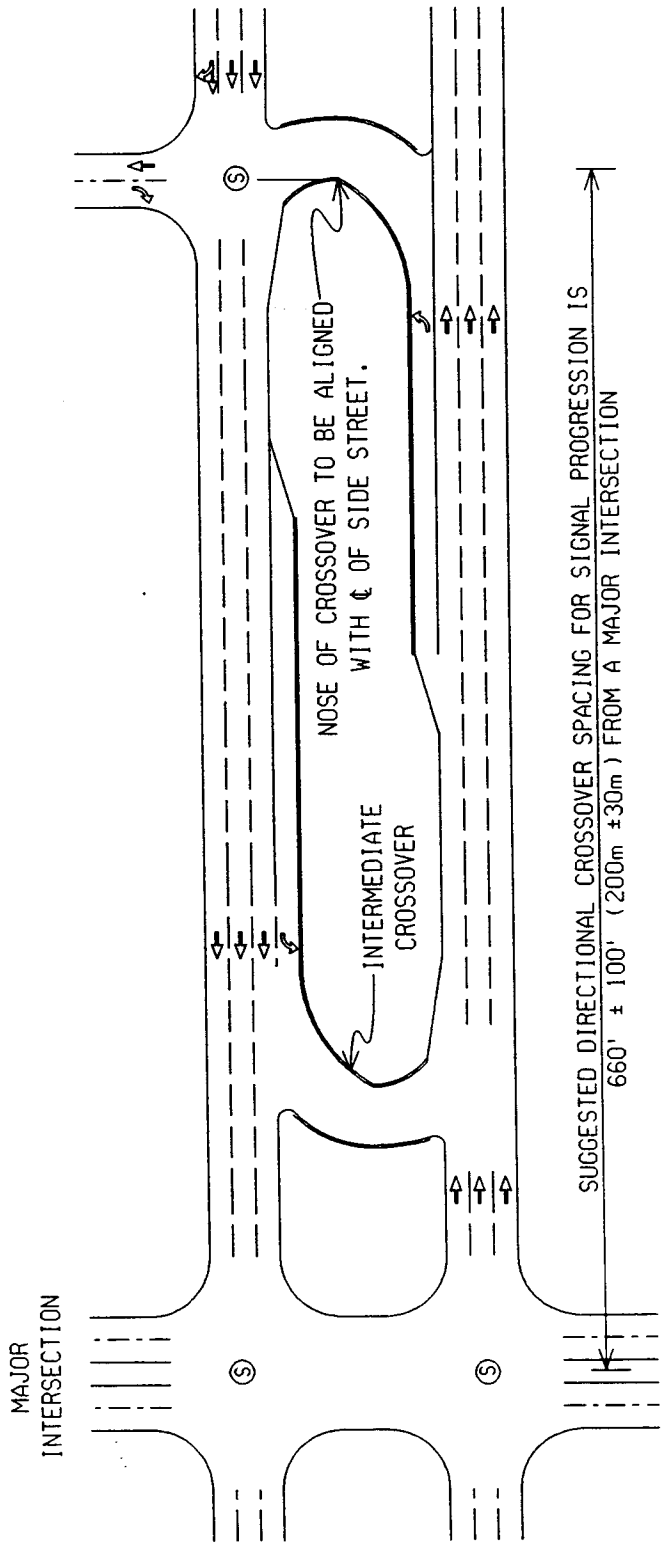

NOTE: THE NUMBER OF CROSSOVERS PER MILE IS DETERMINED BY NEED. GENERALLY, 1/8 MILE (200m) SPACING IS USED IN URBAN AREAS AND 1/4 MILE (400m) SPACING IS USED IN RURAL AREAS.

DIRECTIONAL MEDIAN CROSSOVER

TRAFFIC AND SAFETY DIVISION NOTE

SUBJECT:	**Stopping Sight Distance**
ACTIVITY:	Evaluating Roadway Stopping Sight Distance
PURPOSE:	To Provide General Information about Stopping Sight Distance
ORIGINATING UNIT:	Geometrics Coordination

INFORMATION: The following general discussion on stopping sight distance has been cerpted from the 1984 edition of A Policy on Geometric Design of Highways and Streets (AASHTO):

Stopping Sight Distance

Sight distance is the length of roadway ahead visible to the driver. The minimum sight distance available on a roadway should be sufficiently long to enable a vehicle traveling at or near the design speed to stop before reaching a stationary object in its path. Although greater length is desirable, sight distance at every point along the highway should be at least that required for a below-average operator or vehicle to stop in this distance.

Stopping sight distance is the sum of two distances: the distance traversed by the vehicle from the instant the driver sights an object necessitating a stop to the instant the brakes are applied and the distance required to stop the vehicle from the instant brake application begins. These are referred to as brake reaction distance and braking distance, respectively.

INFORMATION (Continued Next Page)

ACTION REQUIRED: Traffic and Safety Engineers and other MDOT employees may wish to refer to the provisions of this note for general information on stopping distance.

Delete existing note page 14.1.4.

IMPLEMENTATION/COMPLETION: This note will become effective immediately following signed approval by the Engineer of Traffic and Safety.

11-30-88	Calvin Roberts
Date	Engineer of Traffic and Safety

*STOPPING SIGHT DISTANCE		
Assumed Design Speed of Highway	Minimum Stopping Sight Distance	Desirable Stopping Sight Distance
M.P.H.	Feet	Feet
20	125	125
25	150	150
30	200	200
35	225	250
40	275	325
45	325	400
50	400	475
55	450	550
60	525	650
65	550	725
70	625	850

MINIMUM STOPPING SIGHT DISTANCE OVER A CREST

Height of Eye 3.5 Feet - Height of Object 6 Inches

*From MDOT Bureau of Highways Design Guide, "Determining Stopping Sight Distance Over a Crest," VII-700 Series.

TRAFFIC AND SAFETY DIVISION NOTE

SUBJECT: Directional Median Crossovers

ACTIVITY: Reviewing Directional Crossover Permit Applications and Plans for Proposed Construction Projects

PURPOSE: To Improve Highway Traffic Operation by Limiting the Number of Directional Median Crossovers

ORIGINATING UNIT: Geometric Design Unit

INFORMATION: The suggested directional crossover spacing for signal progression is 660 feet **(200m)** from the intersection (plus or minus 100 feet - **30m**). Generally, directional median crossovers have a spacing of 1320 feet **(400m)** in rural areas and 660 feet **(200m)** in urban areas. Closer spacing may be necessary to provide adequate access to traffic generators.

Crossovers may be provided adjacent to major intersections to allow traffic to U-turn and avoid entering the intersection.

Consideration of the turning path of a WB-60 vehicle should be used in determining the geometric design of a directional median crossover.

The Michigan Department of Transportation's current design guide VII-670 series (G-670) should be consulted as the design reference.

See sketch on page 11.4A.

ACTION REQUIRED: Transportation Engineers should be guided by this note when reviewing directional median crossover permit applications and when preparing or reviewing highway construction plans which include directional median crossovers.

Delete existing note page 11.4.

IMPLEMENTATION/COMPLETION: This note will become effective immediately following signed approval by the Engineer of Traffic and Safety.

11/2/94
Date

Robert E Malki
Engineer of Traffic and Safety

DIRECTIONAL DIVIDED DRIVEWAYS

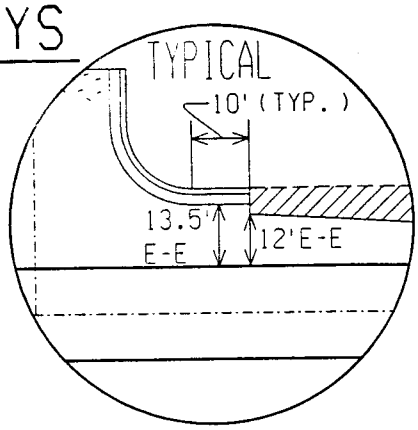

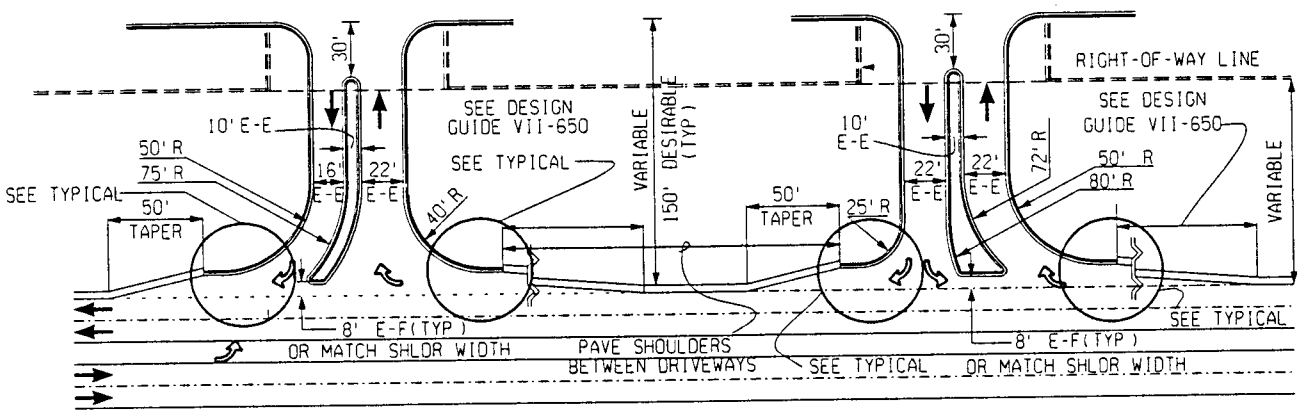

HIGHWAY WITHOUT CURB

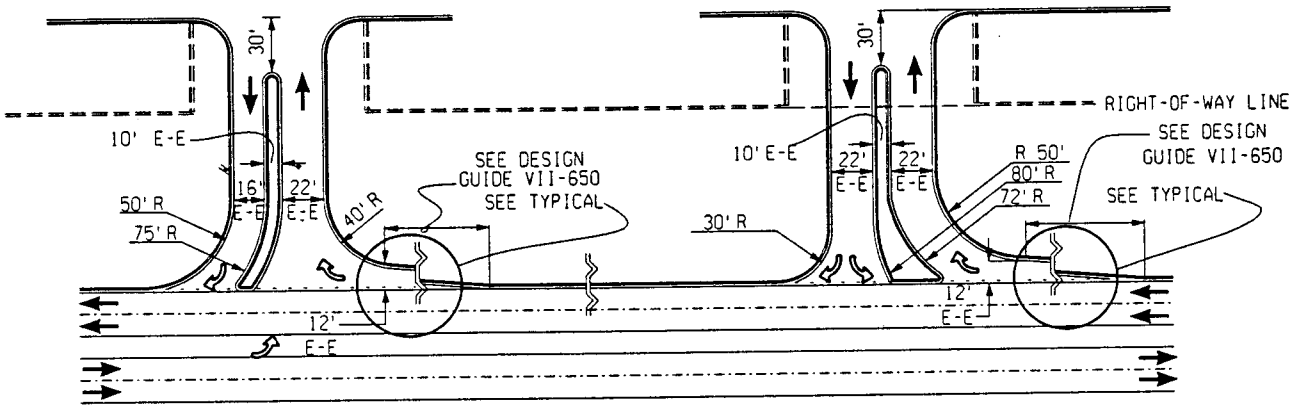

HIGHWAY WITH CURB

O:-DGN-TSG-STDG-English-vii680a.tsg 06-12-2001 mts

MDOT Michigan Department of Transportation	ENGINEER OF CONSTRUCTION & TECHNOLOGY	DEPARTMENT DIRECTOR GREGORY ROSINE	MICHIGAN DEPARTMENT OF TRANSPORTATION BUREAU OF HIGHWAYS DESIGN GUIDE FOR COMMERCIAL DRIVEWAYS
	ENGINEER OF MAINTENANCE		
	ENGINEER OF DESIGN	BY:	
DRAWN BY: LPS		CHIEF ENGINEER/DEPUTY DIRECTOR BUREAU OF HIGHWAYS - TECHNICAL SERVICES	05-09-72 PLAN DATE · VII-680A · SHEET 1 OF 4
CHECKED BY: IG	ENGINEER OF TRAFFIC AND SAFETY		

DIVIDED DRIVEWAYS

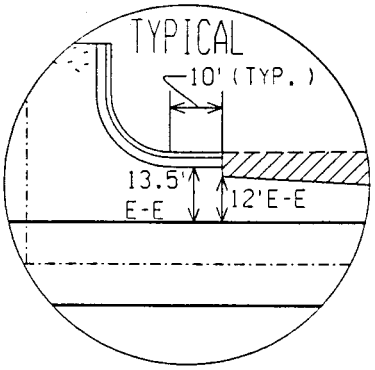

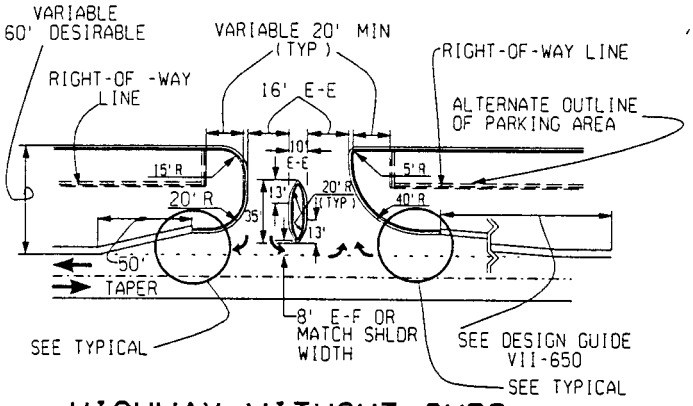

HIGHWAY WITHOUT CURB

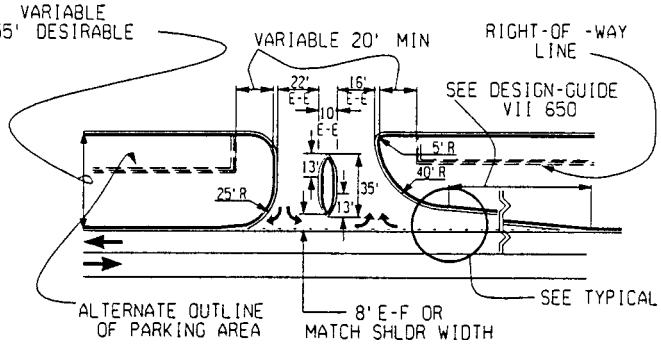

HIGHWAY WITH CURB

TWO - WAY DRIVEWAY

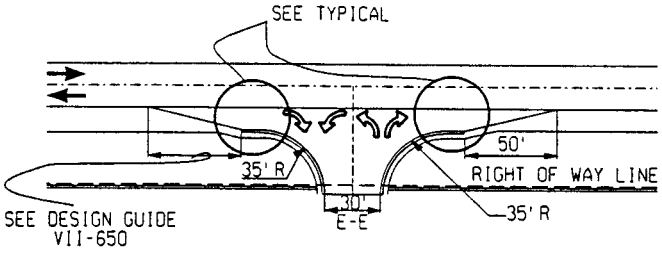

HIGHWAY WITHOUT CURB

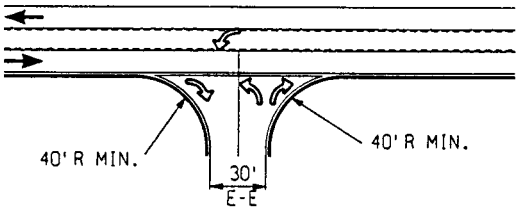

HIGHWAY WITH CURB

RIGHT-IN RIGHT-OUT DRIVEWAYS

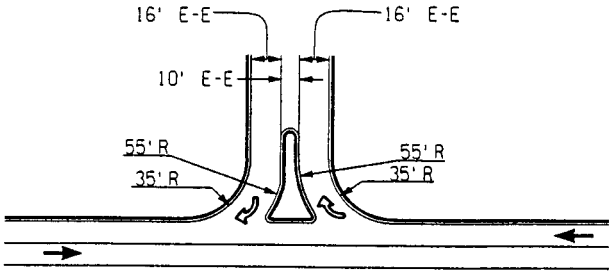

DESIGNED FOR SINGLE UNIT VEHICLE (SU)
"WIDTH AND RADII SHOULD BE MODIFIED TO ACCOMMODATE LARGER VEHICLES"

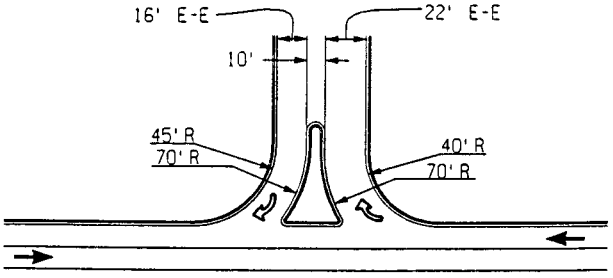

DESIGNED FOR SEMI UNIT VEHICLE (WB-50)
"WIDTH AND RADII SHOULD BE MODIFIED TO ACCOMMODATE LARGER VEHICLES"

HIGHWAY WITH CURB

05-09-72 PLAN DATE	VII-680A	SHEET 2 OF 4

O:-DGN-TSG-STDG-English-vii680a. 06-12-2001 mts

HIGHWAY FRONTAGE

* DRIVEWAYS FOR EACH PROPERTY, INCLUDING RADII MUST BE LOCATED WITHIN THESE LIMITS UNLESS WRITTEN PERMISSION OF THE ADJACENT PROPERTY OWNER IS OBTAINED

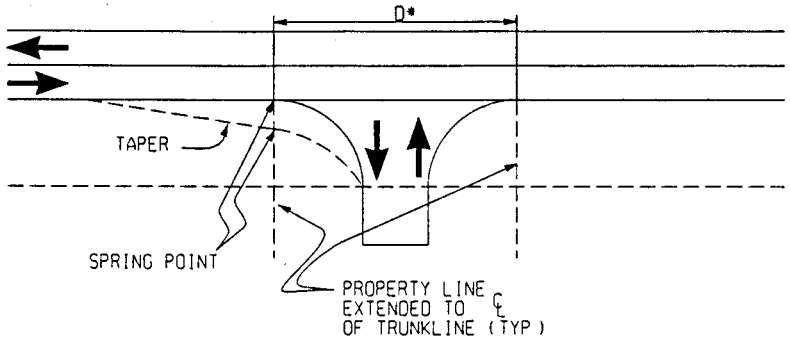

COMMERCIAL DRIVEWAY PROFILE FOR MAJOR TRAFFIC GENERATORS

OVER (100) PEAK HOUR DIRECTIONAL TRIPS.

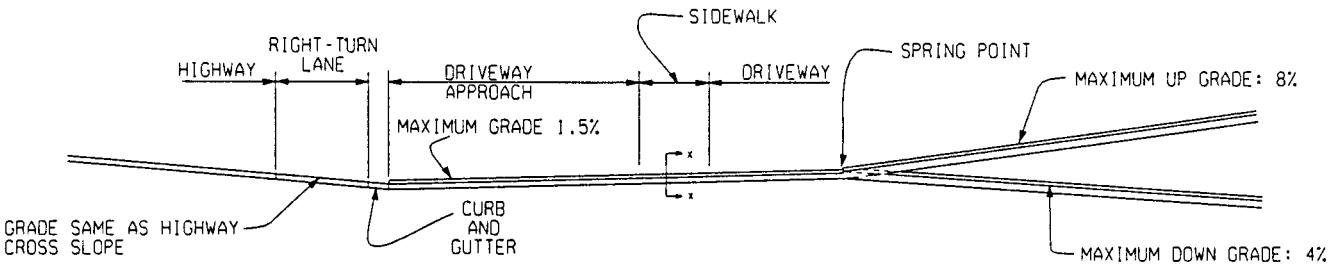

SIDEWALK LOWERING DETAIL

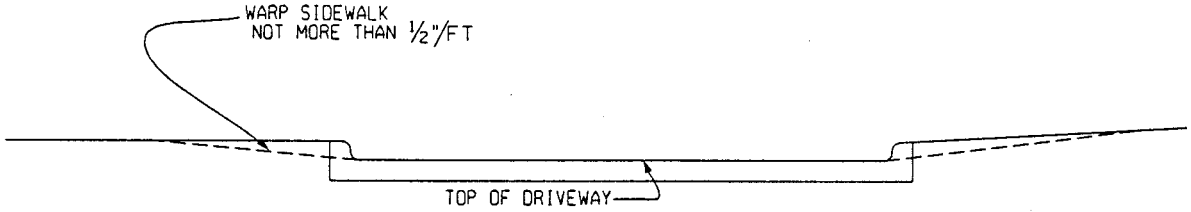

SECTION XX
SIDEWALK LOWERING DETAIL

IN URBAN AREAS THE SIDEWALK SHALL BE LOWERED AT THE EDGE OF THE DRIVEWAY OR LOWERED AS SHOWN IN SECTION XX WHENEVER THE MAXIMUM GRADES SHOWN WILL BE EXCEEDED

LOW VOLUME COMMERCIAL OR RESIDENTIAL DRIVEWAY SLOPES

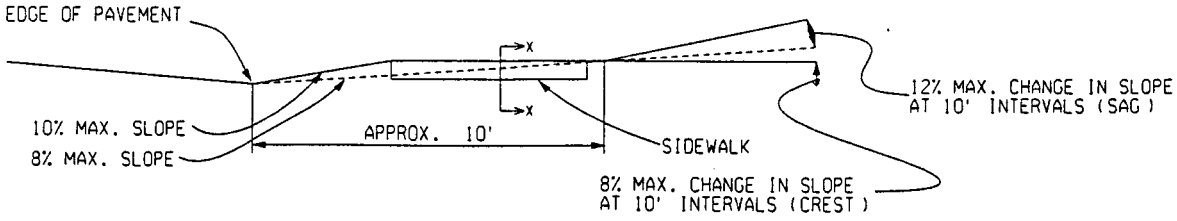

WHEN THE DISTANCE BETWEEN THE SIDEWALK AND EDGE OF PAVEMENT IS 5' OR LESS TILT SIDEWALK TO ½"/FT SLOPE OR MATCH DRIVEWAY APPROACH GRADE.

05-09-72 PLAN DATE	VII-680A	SHEET 3 OF 4

GENERAL NOTES:

1. THE REGION OR TSC TRAFFIC ENGINEER SHALL DETERMINE THE NECESSARY SIGNING AND PAVEMENT MARKING REQUIREMENTS TO ENSURE THAT THE DRIVEWAY WILL OPERATE SAFELY AND EFFICENTLY. THE PROPERTY OWNER SHALL ERECT AND MAINTAIN ALL REQUIRED SIGNING AND PAVEMENT MARKINGS AS A CONDITION OF THE DRIVEWAY PERMIT.

2. DRIVEWAYS TRAFFIC VOLUMES WHICH WARRANT CONCRETE OR BITUMINOUS PAVING MUST BE CURBED. COMMERICAL PROPERTIES ARE REQUIRED TO HAVE CURB OR EQUIVALENT ROADSIDE CONTROL ACROSS THEIR ENTIRE HIGHWAY FRONTAGE, NO CLOSER TO THE ROADWAY THAN THE RIGHT-OF-WAY LINE, AS A CONDITION OF THE DRIVEWAY PERMIT.

3. CONSULT THE REGION OR TSC TRAFFIC ENGINEER WHENEVER:

   A. THERE IS A QUESTION AS TO WHICH TYPE OF DRIVEWAY A COMMERICAL ESTABLISHMENT SHOULD USE.

   B. OPERATIONAL CONFLICTS WITH EXISTING OR ANTICIPATED FUTURE DRIVEWAYS ACROSS THE HIGHWAY MAY OCCUR.

4. SUITABLE MEDIAN CROSSOVERS MAY BE REQUIRED ON DIVIDED HIGHWAYS AS PER DESIGN GUIDE VII-670 SERIES ENTITLED "CROSSOVERS".

5. FOR DIMENSIONS NOT SHOWN ON THIS DESIGN GUIDE, REFER TO ADMINISTRATIVE RULES REGULATING DRIVEWAYS, BANNERS AND PARADES ON AND OVER HIGHWAYS.

6. ONE-WAY DRIVEWAYS SHOULD BE COMPLEMENTED WITH A WELL DESIGNED ANGLE PARKING AREA TO ENCOURAGE ONE-WAY OPERATION.

7. DRIVEWAY WIDTHS AND RADII SHALL BE DESIGNED FOR THE PROPER DESIGN VEHICLE.

8. IN URBAN AREAS, A PARTIAL ARC RADIUS SHOULD BE USED WHEN THE DISTANCE FROM THE EDGE OF METAL TO SIDEWALK IS BETWEEN 5 AND 20 FEET. WHEN THIS DISTANCE IS LESS THAN 5 FEET, CONSULT THE REGION OR TSC TRAFFIC ENGINEER TO DETERMINE THE WIDTH AND RADII OF THE DRIVEWAY.

NOTES FOR DIVIDED DRIVEWAYS

1. THE AREA OF SEPERATING ISLANDS MUST BE GREATER THAN 50 SQUARE FEET, PREFERABLY 100 SQUARE FEET. THE ISLAND WIDTH SHALL NOT BE LESS THAN 4 FEET.

2. TO ELIMINATE LEFT TURNS LOCKING UP FROM THE CROSS STREET OR DRIVEWAYS, UNSIGNALIZED DIVIDED DRIVES SHOULD NOT BE HEADED UP ACROSS FROM EACH OTHER.

UNCURBED INTERSECTIONS

APPROACH TREATMENT DETAIL I

USE ONLY WHEN RECOMMENDED ON G.I.

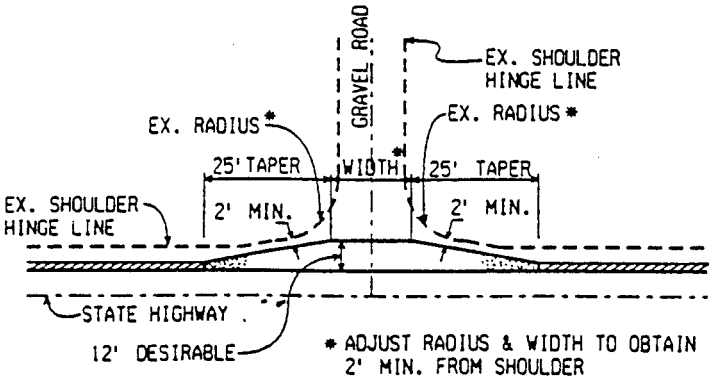

* ADJUST RADIUS & WIDTH TO OBTAIN 2' MIN. FROM SHOULDER HINGE LINE, AS INDICATED.

APPROACH TREATMENT DETAIL II

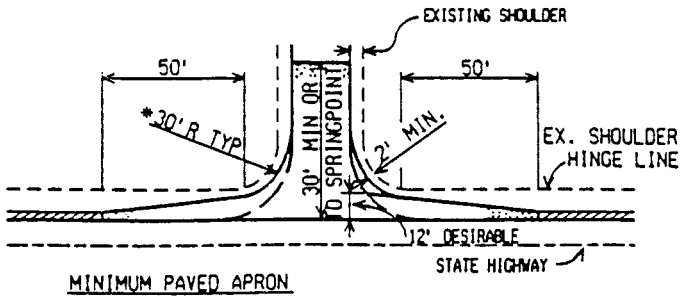

MINIMUM PAVED APRON

BITUMINOUS SURFACING AS PER PLANS

PAVED SHOULDER

CURBED INTERSECTIONS

APPROACH TREATMENT DETAIL III

TYPE 1
(MINIMUM CURBED CONNECTION)

CURBED RADII SHOULD BE USED ON MAJOR COLLECTOR ROADS THAT ARE ELIGIBLE FOR STP FUNDS, WHEN GRAVEL ACCUMULATION AND/OR VEHICLE ENCROACHMENT IS A PROBLEM, OR WHEN ROADSIDE CONTROL IS DESIRABLE.

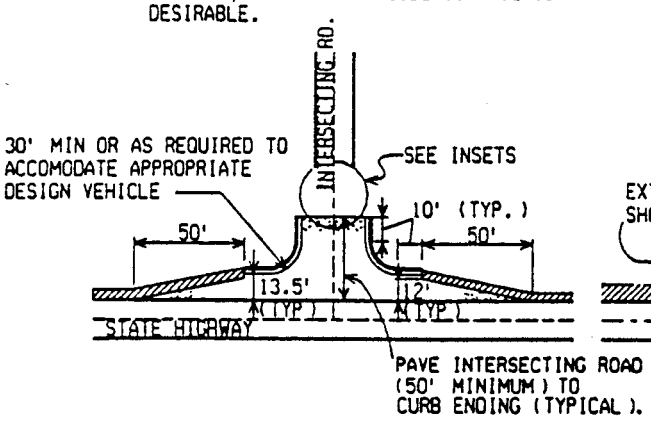

TYPE 2
(RIGHT TURN TAPER)

AS RECOMMENDED BY TRAFFIC AND SAFETY

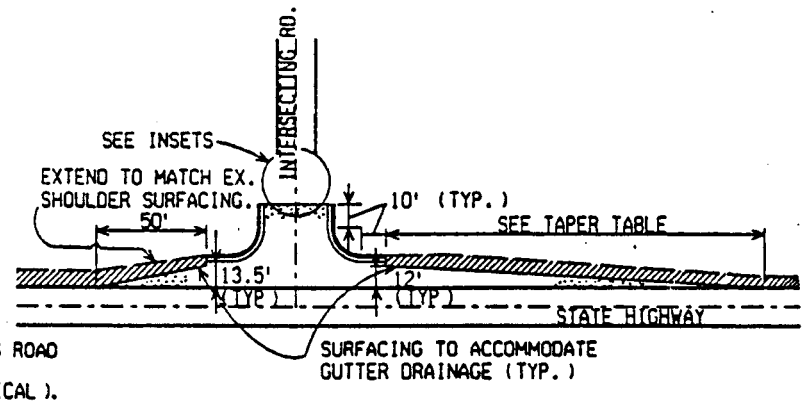

INSETS

INTERSECTING ROAD WITH OR WITHOUT SHOULDERS

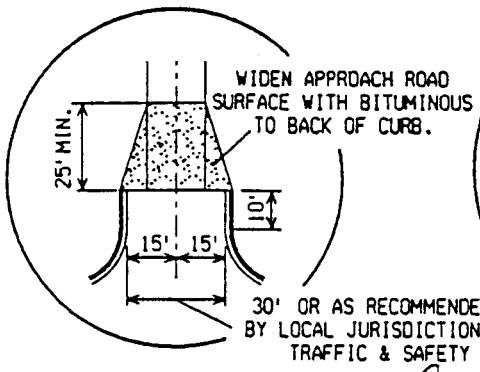

INTERSECTING ROAD WITH ADDED LANE

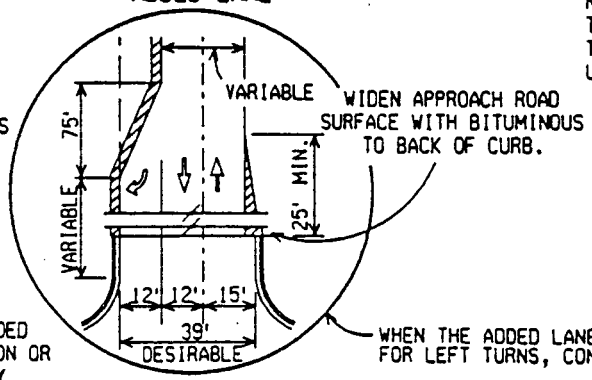

TAPER TABLE

NOT TO BE USED FOR TRANSITIONING THRU TRAFFIC. THE TAPER RATE IS THE SAME FOR BOTH CURBED AND UNCURBED ROADWAYS.

MPH	TAPER FEET
≤ 35	75
40	100
45	130
50	180
55	225

MICHIGAN DEPARTMENT OF TRANSPORTATION

PREPARED BY TRAFFIC & SAFETY

DRAWN BY: PJC

CHECKED BY: T.E.M.

ENGINEER OF CONSTRUCTION

ENGINEER OF MAINTENANCE

ENGINEER OF MATERIALS AND TECHNOLOGY

ENGINEER OF TRAFFIC AND SAFETY

ENGINEER OF DESIGN

DEPARTMENT DIRECTOR
PATRICK M. NOWAK

BY: DEPUTY DIRECTOR - HIGHWAYS

MICHIGAN DEPARTMENT OF TRANSPORTATION
BUREAU OF HIGHWAYS DESIGN GUIDE FOR

FLARES AND INTERSECTION DETAILS

04-22-93
PLAN DATE

VII-650C

SHEET 1 OF 4

CURBED INTERSECTIONS

APPROACH TREATMENT DETAIL III

TYPE 3
(RIGHT TURN LANE)
AS RECOMMENDED BY TRAFFIC & SAFETY

*FOR FULL INTERSECTION ON A TWO LANE ROADWAY, 225' TAPER IS RECOMMENDED.

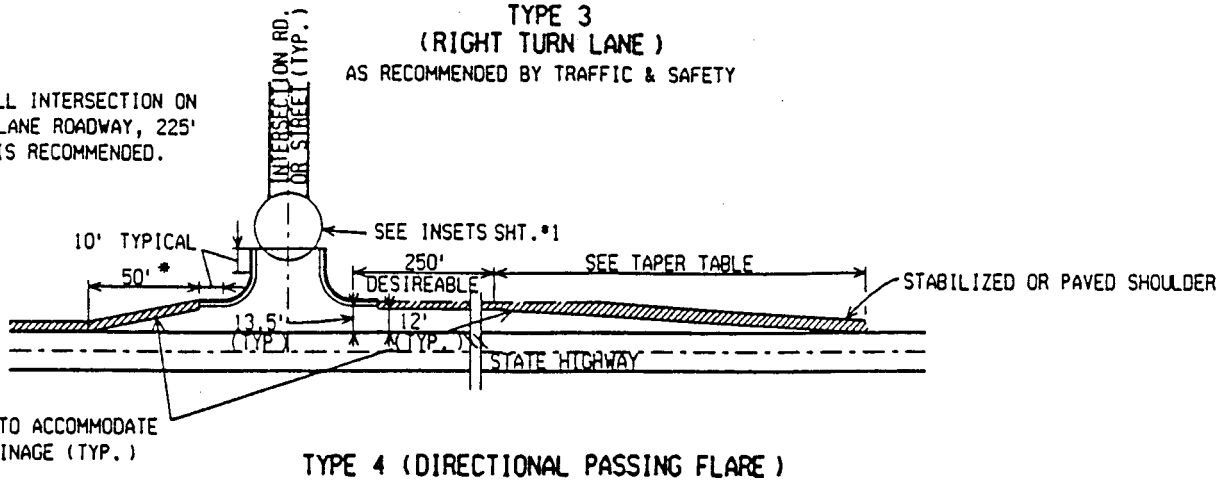

TYPE 4 (DIRECTIONAL PASSING FLARE)
(2 LANE HIGHWAYS)
AS RECOMMENDED BY TRAFFIC & SAFETY

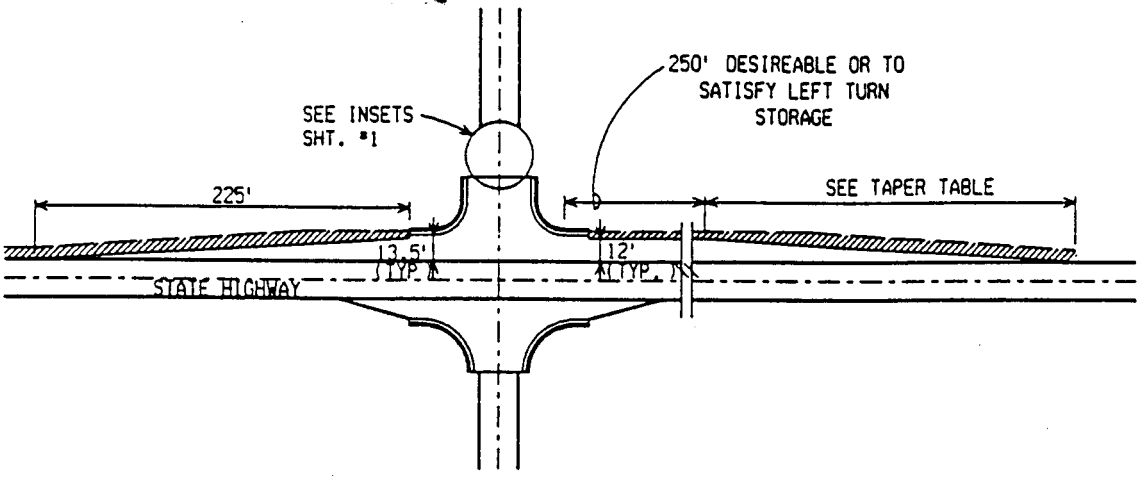

TYPE 4 MODIFIED (PASSING FLARE), FOR T-INTERSECTIONS

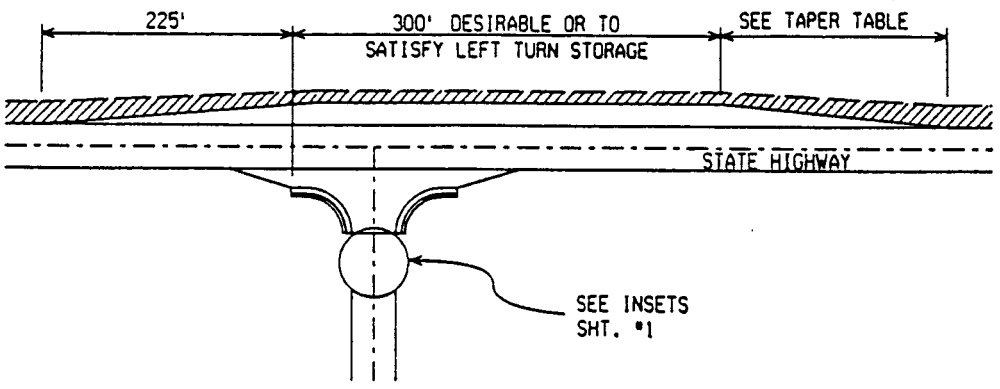

ALLOWABLE APPROACH ROAD GRADES

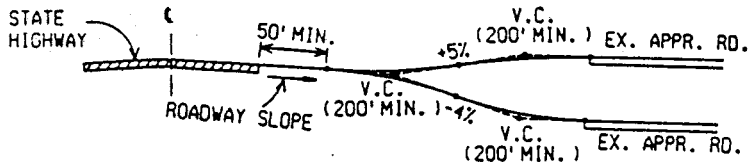

TYPE 5 TWO TO THREE LANE TRANSITION
(RIGHT TURN LANE OPTIONAL)

FOR FULL WARRANT, OR 75% THEREOF, FOR A TRAFFIC SIGNAL BASED ON CURRENT TRAFFIC, OR AS RECOMMENDED BY TRAFFIC & SAFETY.

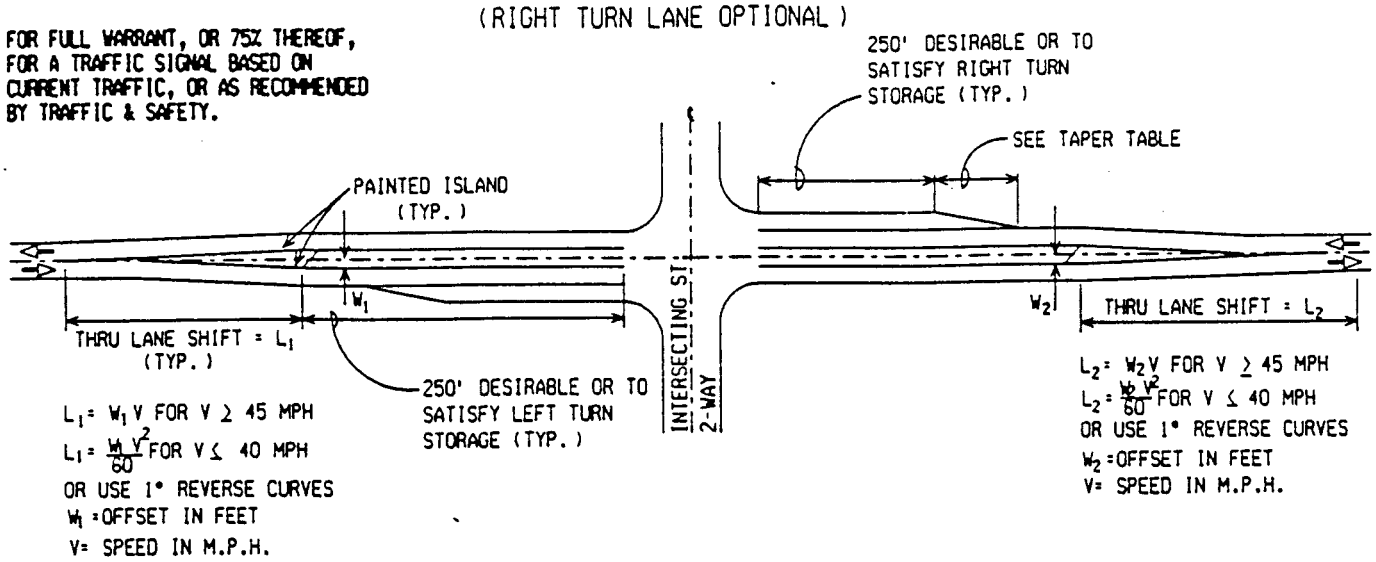

$L_1 = W_1 V$ FOR $V \geq 45$ MPH

$L_1 = \frac{W_1 V^2}{60}$ FOR $V \leq 40$ MPH

OR USE 1° REVERSE CURVES

W_1 = OFFSET IN FEET

V= SPEED IN M.P.H.

$L_2 = W_2 V$ FOR $V \geq 45$ MPH

$L_2 = \frac{W_2 V^2}{60}$ FOR $V \leq 40$ MPH

OR USE 1° REVERSE CURVES

W_2 = OFFSET IN FEET

V= SPEED IN M.P.H.

TYPE 5 MODIFIED (LEFT TURN LANE), FOR T-INTERSECTIONS

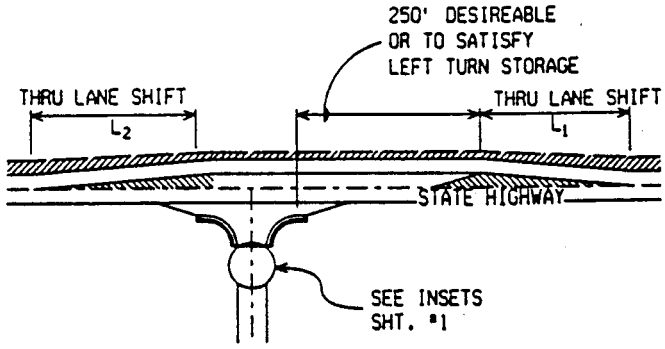

NOTES

1. AN INTERSECTING ROAD AS HEREIN DEFINED MAY BE A CITY STREET, COUNTY ROAD OR STATE HIGHWAY.
2. 12' WIDE LANES ARE TO BE USED UNLESS CONDITIONS REQUIRE NARROWER LANES.
3. TAPER LENGTHS SHOWN ON DETAILS MAY BE MODIFIED TO FACILITATE TRAFFIC MOVEMENT. CONSULT THE GEOMETRIC DESIGN UNIT OF TRAFFIC & SAFETY DIVISION.
4. THE PARALLEL PORTIONS SHOWN ON DETAILS MAY BE MODIFIED DUE TO PHYSICAL CONSTRAINTS. CONSULT THE GEOMETRIC DESIGN UNIT OF TRAFFIC & SAFETY DIVISION.
5. APPROACH ROADS THAT ARE CITY STREETS OR COUNTY ROADS MAY BE FLARED AS SHOWN FOR STATE HIGHWAYS IF FINANCED BY LOCAL AUTHORITIES.
6. FOR AN OVERVIEW OF RAMP TERMINAL DESIGN, SEE DESIGN GUIDES VII-300, VII-370 AND VII-400.
7. SEE STANDARD PLAN II-30 FOR CURB AND GUTTER DETAILS.
8. CLEAR VISION AREAS SHOULD BE CONSIDERED AT ALL INTERSECTIONS.
9. WHERE UNUSUAL PHYSICAL CONDITIONS PREVAIL, THIS GUIDE MAY BE MODIFIED. CONSULT THE GEOMETRIC DESIGN UNIT OF TRAFFIC & SAFETY DIVISION.

INTERSECTION LAYOUTS

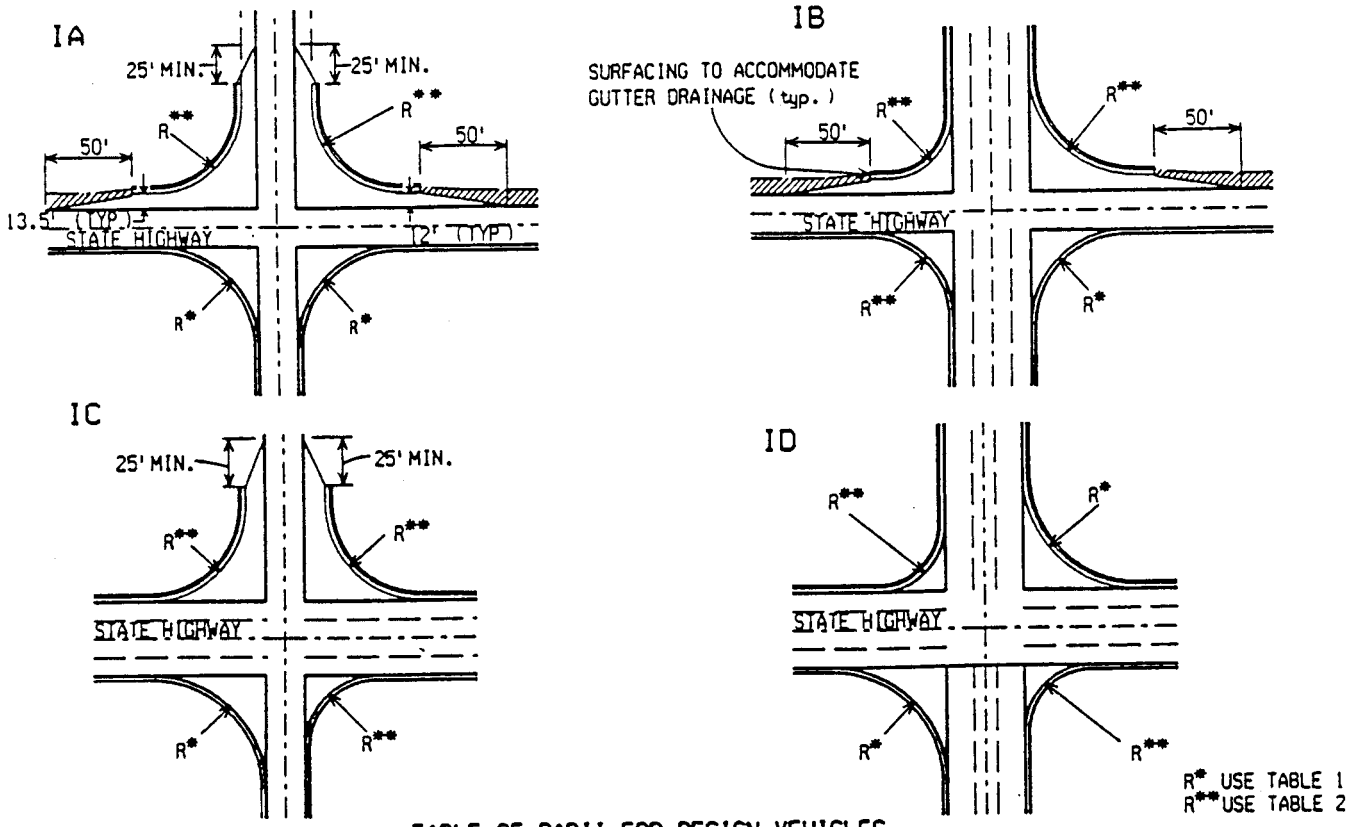

TABLE OF RADII FOR DESIGN VEHICLES
SEE NOTE 4

TABLE 1

TURN FROM 12' OUTSIDE LANE TO 12' OUTSIDE LANE			
DESIGN VEHICLES	ANGLES OF TURN		
	60°-79°	80°-99°	100°-120°
P	30' R	30' R	30' R
SU	50' R	50' R	40' R
WB-50	90' R	80' R	60' R
WB-60	120' R	110' R	80' R

TABLE 2

TURN FROM 12' OUTSIDE LANE TO 20' + OUTSIDE LANE*			
DESIGN VEHICLES	ANGLES OF TURN		
	60°-79°	80°-99°	100°-120°
P	30' R	30' R	30' R
SU	30' R	30' R	30' R
WB-50	50' R	50' R	40' R
WB-60	70' R	60' R	50' R

*OUTSIDE LANE MAY INCLUDE PAVED SHOULDER WIDTH OR CURB OFFSET

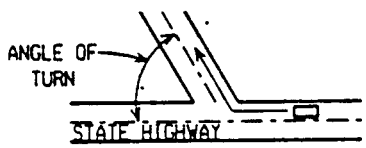

60°-79°

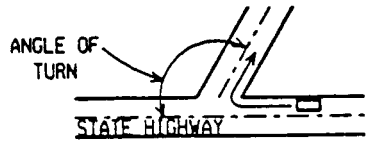

100°-120°

1. DESIGN VEHICLES; P = PASSENGER CAR, SU = SINGLE UNIT TRUCK (30' OVERALL), WB-50 = TRACTOR-TRAILER COMBINATION (50' WHEEELBASE), WB-60 = INTERSTATE SEMI-TRAILER (60' WHEELBASE).
2. ANGLE OF INTERSECTION OF APPROACH ROAD AND STATE HIGHWAY SHOULD NOT BE LESS THAN 60 DEGREES OR MORE THAN 120 DEGREES.
3. FULL SHOULDERS ARE DEFINED AS 8' OR WIDER.
4. THE ABOVE TABLES ARE TO BE USED AS A GUIDE, TURNING VEHICLE TEMPLATES SHOULD BE USED FOR VERIFICATION.
5. WHEN A STATE HIGHWAY INTERSECTS A ONE WAY APPROACH, IN NON-TURNING QUADRANTS THE RADIUS SHALL BE A MAXIMUM OF 10'.
6. ON GREEN ROUTE TO GREEN ROUTE INTERSECTIONS, A WB-60 INTERSTATE SEMI-TRAILER IS THE DESIGN VEHICLE.
7. FOR DUAL TURNS - CONSULT GEOMETRIC DESIGN UNIT OF TRAFFIC & SAFETY.

Michigan Department of Transportation
2205 (8/99)

INDIVIDUAL APPLICATION AND PERMIT

FOR USE OF STATE TRUNKLINE RIGHT OF WAY

Information required by Act 368 of P.A. 1925 and Act 51 of P.A. 1951 to authorize permitted activities.

This permit is incomplete without form 2205-1, "General Conditions and Supplemental Specifications."

PRINT IN INK OR TYPE. SEE REVERSE FOR SPECIAL CONDITIONS AND ATTACHMENTS.

THIS SPACE FOR MDOT USE ONLY		
PERMIT NO.		
ISSUE DATE	EXPIRATION DATE	
FEE $	☐ Cash ☐ Exempt ☐ Billable	BY
DEPT. BOND NO.	BOND AMOUNT $	

APPLICANT NAME			CONTRACTOR NAME (Individual, Company, etc.)		
MAILING ADDRESS			MAILING ADDRESS		
CITY	STATE	ZIP CODE	CITY	STATE	ZIP CODE
CONTACT'S NAME	PHONE NO. ( )		CONTACT'S NAME	PHONE NO. ( )	

REQUEST: I do hereby make application for a permit to use the right of way of the following state trunkline highway.

STATE TRUNKLINE	CITY OR TOWNSHIP	SECTION	TOWN T	RANGE R	COUNTY
NEAREST CROSSROAD	SIDE OF ROAD	DISTANCE TO NEAREST CROSSROAD (in feet)	DIRECTION TO NEAREST CROSSROAD ☐ NORTH ☐ SOUTH ☐ EAST ☐ WEST		
PROPOSED START DATE	PROPOSED COMPLETION DATE		PLANS ATTACHED? ☐ YES ☐ NO		

PURPOSE:

REQUISITION NO.	WORK ORDER NO.	JOB NO.

I certify that I accept the following:

1. Commencement of work set forth in the permit application constitutes acceptance of the permit as issued.
2. Failure to object within ten (10) days to the permit as issued constitutes acceptance of the permit as issued.
3. If this permit is accepted by either of the above methods, I will comply with the provisions of the permit.
4. If this permit is for commercial or residential driveway work, I certify that I am the legal owner of the property for which this driveway will serve, or I am the owner's authorized representative.

APPLICANT/AUTHORIZED AGENT (If Authorized Agent - I hereby certify that I am acting as an authorized agent on behalf of the named applicant. Certificate of agency attached.)	NAME and TITLE (Please Print or Type)	DATE
	SIGNATURE	FEDERAL TAX I.D. or SOCIAL SECURITY NO.

MDOT USE ONLY - DO NOT WRITE BELOW THIS LINE

CONTROL SECTION	TRUNKLINE	WORK TYPE CODE	ECC *	WORK METHOD	MILEPOINT FROM	MILEPOINT TO	LOCATION
							☐ L ☐ M ☐ R ☐ T
							☐ L ☐ M ☐ R ☐ T

ENVIRONMENTAL ASSESSMENT
☐ CATEGORICAL EXCLUSION ☐ OTHER (Describe):

INSPECTION TYPE ☐ DEPARTMENT ☐ MAINT. AGENCY ☐ OTHER	INSPECTION BY:	PHONE	INSPECTION STATUS ☐ ROUTINE ☐ BILLABLE
SURETY TYPE ☐ EXEMPT ☐ CASH ☐ RESOLUTION ☐ BOND ☐ SELF-INSURED ☐ CREDIT LETTER ☐ RETAINER LETTER		LIABILITY INSURANCE ☐ SELF-INSURED ☐ REQUIRED ☐ EXEMPT	

REVIEWED BY:	INT.	DATE
Constr. & Techno.		
Maintenance		
Traffic & Safety		
Resource Specialist		
Design		
Maint. Agency		
Permits		

RECOMMENDED FOR ISSUANCE

NAME	TITLE	DATE

APPROVED FOR MICHIGAN DEPARTMENT OF TRANSPORTATION BY:

UTILITIES-PERMITS ENGINEER or REGION /TSC U-P ENGINEER	DATE
WORK ACCEPTED BY (Signature):	DATE

* ENVIRONMENTAL CLASSIFICATION CODE

THE ATTACHMENTS AND SPECIAL CONDITIONS MARKED BELOW ARE A PART OF THIS PERMIT.

ATTACHMENTS

- ☐ Special Conditions for Underground Construction (Form 2205C)
- ☐ Special Conditions for Seismic Explorations (Form 2251)
- ☐ Special Conditions for Discharge of Treated Effluent (Form 2252)
- ☐ Special Conditions for Monitoring Wells (Form 2253)
- ☐ Special Conditions for Transverse Crossings (Form 2254)
- ☐ Special Conditions for Excavating in Contaminated Site Closure Areas (Form 2257)
- ☐ Special Conditions for Contaminated Site Closure (Form 2259)
- ☐ Special Conditions for Alternate Environmental Cleanup Methods (Form 2475)
- ☐ Bore and Jack Special Provision (GP-1, DP- _____ , JP- _____)
- ☐ Utility Cuts, Trenches and Pavement Replacement (PA - 01)
- ☐ Permit Plan for Rural and Urban Residential Driveways (PA-09)
- ☐ Commercial Driveway, (PA -): _____
- ☐ Traffic Control Details: _____
- ☐ OTHER: _____
- ☐ OTHER: _____
- ☐ OTHER: _____

SPECIAL CONDITIONS

- ☐ The Department of Transportation does not, by issuance of this permit, assume any liability claims or maintenance costs resulting from the _____ facility placed by this permit. The Department reserves the right to require removal of all or any portion of this facility as needed for highway maintenance or construction purposes without replacement or reimbursement of any costs incurred by the permittee or other party. The permittee will defend, indemnify and hold harmless the Department for any claims whatsoever resulting from the construction or the removal of the _____ authorized by this permit.
- ☐ All disturbed areas within the right of way shall be top-soiled, seeded and mulched to match existing areas per current MDOT standards and specifications.
- ☐ Upon completion of the work, the permittee shall furnish the Department with a set of as-built construction plans covered by this permit.
- ☐
- ☐

GENERAL CONDITIONS

This permit is issued subject to the following conditions:

1. This permit grants to the permittee only those rights specifically stated and no other. Maintenance work within the trunkline right of way may require a separate permit unless authorized within the scope of the annual permit. Individual permits must be secured for any work in limited access right of way.

2. Issuance of this permit does not relieve permittee from meeting any and all requirements of law, or of other public bodies or agencies. The permittee shall be responsible for securing and shall secure any other permits or permission necessary or required by law from cities, villages, townships, corporations, or individuals for the activities hereby permitted.

3. The permittee agrees as a condition of this permit to:

   a. Have in the permittee's or the permittee's representative's possession on the job site at all times the approved permit or a copy thereof, with necessary plans or sketches.

   b. Give advance notice of permitted activity to the Department Region Utilities-Permits Engineer or designated representative at least five (5) days prior to commencement of any operations covered by this permit, or as specified (form 2204).

   c. Perform no work except emergency work, unless authorized by the Department, on Saturdays, Sundays, or from 3:00 p.m. on the day preceding until the normal starting time the day after the following holidays: New Year's Day, Memorial Day, Independence Day, Labor Day, Thanksgiving Day and Christmas Day.

   d. Provide and maintain all necessary precautions to prevent injury or damage to persons and property from operations covered by this permit.

   e. Furnish, install and maintain all necessary traffic controls and protection during permittee's operations in accordance with the Michigan Manual of Uniform Traffic Control Devices and any supplemental specifications set forth herein.

   f. Advise the Region Utilities-Permits Engineer or designated representative within seven (7) days of completion of work authorized by this permit, so that final inspection may be made and surety deposit released (where applicable). Surety deposit will not be released until the work authorized by the permit has been completed and inspected, and all inspection charges billable to the permittee are paid.

4. Nothing in this permit shall be construed to grant any rights whatsoever to any public utilities, except as to the consent herein specifically given, nor to impair any existing rights granted in accordance with the constitution or laws of this state.

5. Any operations in the trunkline right of way not covered by permit and the appropriate Department specifications are in violation of the jurisdictional authority of the Department, with respect to the control of the trunkline right of way, unless approved by the Region Utilities-Permits Engineer. Any change or alteration in the permit activities requires prior approval of the Department and may require a new permit.

6. Performance of the requirements of this permit is the responsibility of the permittee. The permittee shall complete all operations for which this permit is issued in accordance with the conditions of this permit, by the specified completion date. The permittee shall meet all requirements of the current Department Standard Specifications for Construction, and the Supplemental Specifications set forth on/or incorporated as a part of this permit.

7. The construction, operation and maintenance of the facility covered by this permit shall be performed without cost to the Department unless specified herein. The permittee shall be responsible for the cost of restoration of the state trunkline and right of way determined by the Department to be damaged as a result of the activities of the permittee.

8. Facilities allowed on state trunkline right of way shall be placed and maintained in a manner which will not impair the state trunkline or interfere with the reasonable safe and free flow of traffic. Failure of the permittee to maintain the facilities located within the State trunkline right of way so as not to interfere with the operation, maintenance or use of the state trunkline by the traveling public may result in revocation of the permit.

9. The permittee is solely and fully responsible for all activities undertaken pursuant to the permit. Any and all actions by the Department and those governmental bodies performing permit activities for the Department pursuant to a maintenance contract, including but not limited to any approved reviews and inspections of any nature, permit issuing, and final acceptance or rejection of the work or activity authorized by the permit shall not be construed as a warranty or assumption of liability on the part of the Department or those governmental bodies. It is expressly understood and agreed that any such actions are for the sole and exclusive purposes of the Department and the governmental bodies acting in a governmental capacity. Any such actions by the Department and governmental bodies will not relieve the permittee of its obligations hereunder, nor are such actions by the Department and the governmental bodies to be construed as a warranty as to the propriety of the permittee's performance. The permittee shall save harmless the State of Michigan, Michigan Transportation Commission, the Department and all officers, agents and employees thereof, and those governmental bodies performing permit activities for the Department and all officers, agents and employees thereof, pursuant to a maintenance contract, against any and all claims for damages arising from operations covered by this permit and upon request shall furnish proof of insurance coverage for the term of this permit in an amount prespecified.

10. This permit is not assignable and not transferrable unless specifically agreed to by the Department.

11. The permittee, upon request of the Department, shall immediately remove, cease operations, and surrender this permit, or alter or relocate, at the permittee's own expense, the facility for which this permit is granted. Upon failure to do so, the Department may take any necessary action to protect the trunkline interest and the permittee shall reimburse the Department for its costs in doing same. The permittee expressly waives any right to claim damages or compensation in the event this permit is revoked.

12. The permittee shall, upon request by the Department, furnish a performance surety deposit in the form of a bond, cash, certified check, or (when authorized by the Department) an irrevocable letter of credit in such amount as deemed necessary by the Department to guarantee restoration of the trunkline highway or performance under the conditions of the permit.

13. The permittee hereby acknowledges and agrees that the Department has the right to demand completion by the permittee, or the performance surety, or to complete any uncompleted activity authorized by this permit which adversely affects the operation and/or maintenance of the state trunkline highway, or which is not completed by the expiration date of the permit, including:

    a. Completion of construction of driveway and/or approach (not authorized by annual permit).

    b. Removal of materials.

    c. Restoration of the trunkline facilities and right of way as necessary for the reasonably safe and efficient operations of the trunkline highway.

    The permittee further agrees to immediately reimburse the Department in full for all such costs incurred by the Department upon receipt of billing, and that upon failure to pay, the Department may effect payment with the performance surety deposit. Should the surety deposit be insufficient to cover expenses incurred by the Department, the permittee shall pay such deficiency upon billing by the Department. If the surety deposit exceeds the expense incurred by the Department, any excess will be returned or released to the depositor upon completion of the work to the satisfaction of the Department.

14. The Department reserves the right during the time any or all of the work is being performed to assign an inspector to protect the trunkline interest, and to charge the permittee all such costs incurred. In addition, the permittee may be billed any engineering and review fees incurred by the Department or its agent in connection with the work covered by this permit.

15. Emergency Operations: In time of disaster or emergency, or when utility lines or facilities are so damaged as to constitute a danger to life and property of the public, access to the same may be had by the most expeditious route. Work is to be done in a manner which will provide the traveling public with maximum possible safety. Notice of such situations shall be given to the nearest police authority and the Department as soon as can reasonably be done under the circumstances. During normal Department working hours, the permittee shall advise the Region Utilities-Permits Engineer of any operations within right of way which affect traffic operations or the highway structure or facilities prior to performance of the work. After normal Department working hours, the permittee, at the beginning of the first working day after the emergency operation, shall advise the Region Utilities-Permits Engineer of any operations which affect traffic operations or the highway structures and facilities. If determined necessary by the Region Utilities-Permits Engineer, the permittee shall secure an individual permit for such work after notification.

16. Upon the Department's request, as built drawings of work performed will be furnished to the Department within 30 days after completion of the work.

17. The permittee shall give notice to public utilities in accordance with Act 53, P.A. of 1974, as amended, and comply with all applicable requirements of this act. The permittee shall also comply with requirements of Act 347, P.A. of 1972, as amended, controlling soil erosion and sedimentation.

18. The permittee acknowledges that the Department is without liability for the presence of the permittee's facility which is located within the trunkline right of way. Acceptance by the Department of work performed, and/or notice of termination of performance obligations for the surety and/or the permittee do not relieve the permittee of full responsibility for the permittee's work or for the presence of the permittee's facility in the trunkline right of way.

19. Where the Department has accepted an Indemnification Commitment in lieu of bond and/or insurance policies, such commitment is incorporated into this permit by reference.

20. It is illegal to discharge substances other than storm water into the Department's storm sewer system unless permission has been obtained in writing for other discharges.

21. The permittee shall be responsible for obtaining information on permitted environmental site closures within MDOT right of way. MDOT has implemented a program that allows environmental contamination to remain within the right of way by use of a permit. Issued permit information can be obtained from the Region/TSC in which the permit is issued. If the permittee will encounter a site area identified as a site closure permit area, the permittee shall follow instructions and conditions set forth in Supplemental Specification #3 and specifications found in form 2205-C, "Special Conditions for Underground Construction."

SUPPLEMENTAL SPECIFICATIONS

1. Construction and Maintenance of Facilities - To construct and maintain utility crossings of limited access highways, access for the utility's service vehicles may be from county roads, service roads, and openings authorized in limited access right of way fences. The construction of utilities across limited access highways should be for the purpose of serving a general area rather than providing individual services, unless extenuating circumstances necessitate such crossings.

   Equipment, vehicles or personnel will not operate within a distance of 10 meters (30 feet) from the edge of the pavement of roadways or ramps on limited access highways. At locations where utilities have been constructed in medians having a width greater than 25 meters (80 feet), or have otherwise been allowed to remain or to be constructed in limited access right of way, ingress and egress shall be by such routes as specified by the Department, which may also specify additional safety provisions.

   Unless authorized, no maintenance of facilities will be permitted with access from the main roadways or ramps of limited access highways.

2. Restoration - Restoration of the trunkline highway and right of way will be such that it will provide a condition equal to or better than the original condition, in accordance with Michigan Department of Transportation Standard Specifications.

3. Excavation and Disposal of Excavated Material - The permittee shall provide and place the necessary sheeting, shoring and bracing required to prevent caving, loss or settlement of foundation material supporting the pavement, or any other highway installation such as sewers, culverts, etc. The permittee shall assume the full responsibility for this protection and shall not proceed in these areas before approval of methods by the Department.

   Construction equipment and excavating material shall not be stocked in such locations that it creates a traffic hazard or interferes with the flow of traffic; and on limited access highways, shall be a minimum of 10 meters (30 feet) from the traveled way. Sod and topsoil shall be stacked separately from other excavated material. The permittee shall dispose of all surplus and unsuitable material outside of the limits of the highway, unless the permit provides for disposal at approved locations within the right of way. In the latter case, the material shall be leveled and trimmed in an approved manner.

   When the permittee is excavating within trunkline right of way and discovers existing contaminated soil and/or an abandoned underground storage tank, special permit specifications entitled "Special Conditions for Underground Construction" (Form 2205-C) shall apply.

4. Utility Cuts, Trenches and Pavement Replacement - Utility crossing by pavement cutting and removal are generally prohibited. If extenuating circumstances make boring and jacking impractical pavement cutting may be used with approval of the Utilities-Permits Engineer. All utility cuts, trenching and pavement replacement shall comply with the requirements of the Standard Specifications and the Standard Plan "Utility Cuts, Trenches and Pavement Replacement." Unless otherwise specified, cuts in concrete residential and commercial drives shall be as above, except that the patch width shall be a minimum of 1 meter (3 feet) and the remaining slab from patch to existing joint shall be a minimum of 1 meter (3 feet). Backfill shall be made with sand-gravel as specified in the Standard Specifications, unless otherwise directed. After the backfill has been placed and compacted by controlled density method, the pavement shall be replaced with new pavement of the original type and quality, unless at a season of the year when it is not feasible to replace pavement in kind. In this case, a temporary surface of bituminous material shall be placed with Department approval and later replaced with pavement of the original type at the applicant's expense. Other pavement types may be allowed with prior approval of the Department.

5. Crossing Roadbed by Tunneling or Boring and Jacking - All crossing of roadbed operations involving tunneling, boring and jacking shall comply with the Department's special provisions for such work.

6. Backfilling and Compacting Backfill - Unless otherwise specified, all trenches, holes and pits shall be filled with sound earth or with sand-gravel if so provided, placed in successive layers not more than 233 mm (9 inches) in depth, loose measure, and each layer shall be thoroughly compacted by tamping. All backfill compaction will be subject to check by the controlled density method.

7. Depth of Cover Method - Unless otherwise authorized, pipes shall be placed to a depth that will provide not less than 1.3 meters (4 feet) of cover between the top of roadway surface and the pipe, or 1 meter (3 feet) of cover below the ditch line and the pipe.

8. Trees:
   a. The permittee is responsible for obtaining permission from abutting owners when trimming or removing trees on easement right of way.
   b. Tree removal or trimming may be undertaken only after submission of an "Advance Notice of Permitted Activity" (form 2204), a field review by the Region Resource Specialist and a written approved copy of the advance notice returned to the permittee.
   c. Limbs, logs, stumps and litter shall be disposed of in a manner acceptable to the Department.
   d. Tree roots shall be bored a distance of 12 mm for each mm of trunk (one foot for each one inch of trunk) diameter for underground utility installations.

9. Aerial Wire Crossings - Vertical clearance of wires, conductors and cables over state trunkline shall not be less than required by Section 232 of the National Electrical Safety Code, except that in no case shall the underclearance below any wire, conductor or cable, under any temperature or loading condition, be less than 5.5 meters (18 feet).

f. Submit a surety bond depending on the nature of permit request and effects within the highway right-of-way. You will be notified if such a bond is required upon receipt of your application.

5. Please submit applications as early as possible to expedite the acquisition of your approved permit.

k. **Requisition Number, Work Order Number, Job Number:** These are provided for your use only.

l. Complete the name and title, date, federal tax ID or social security number, and sign where indicated. The remainder of the application will be completed by MDOT once received.

2. All applications must meet the following basic requirements before they are processed:

a. All entries should be printed in ink or typewritten, except for the signature block.

b. Return along with detailed information and proper fee. These charges are for permit review and are not refundable. Please make checks payable to the State of Michigan.

c. All work locations must be staked using some type of identifiable marker (including your name listed on the marker). Please indicate on the application what you've used to stake this location. This will assist MDOT personnel in locating the work area and avoid unnecessary delays.

3. Right of Way Occupancy Agreements

A Right of Way Occupancy Agreement in addition to the permit may be required in certain circumstances. This may involve a six-month processing time. You will be notified upon receipt of your application if this is required.

4. The applicant should not begin construction work within the highway right-of-way until an approved permit has been received (for liability purposes). The permittee will also be required to:

a. Give notice in such form as requested to the Department's TSC Utilities/Permits Engineer or designated representative at least five (5) days prior to commencement of any operations covered by this permit, or as specified.

b. Perform no work, except emergency work, unless authorized by the Department, on Saturdays, Sundays, or from 3:00 p.m. on the day preceding a holiday until the normal starting time on the day after the following holidays: New Year's Day, Memorial Day, Independence Day, Labor Day, Thanksgiving Day, and Christmas Day.

c. Provide and maintain all necessary precautions to prevent injury or damage to persons and property from operations covered by this permit.

d. Furnish, install, and maintain all necessary traffic controls and protection during permitee's operations in accordance with the traffic control detail(s) which will be included in the approved permit packet at the time of issuance.

e. Advise the TSC Unities-Permits Engineer or designated representative within seven days of completion of work authorized by this permit so that a final inspection may be made, and where appropriate, the surety deposit released.

GENERAL APPLICATION REQUIREMENTS

1. Completion of Form 2205 (Individual Application and Permit For Use of State Trunkline Right of Way):

   a. **Applicant's Information Block:** This should be completed as requested by the individual, organization, or governmental agency that owns the property on which this work will take place. If the property owner chooses to appoint an agent to sign the form, MDOT must be provided with a Certificate of Agency (MDOT form 2209) which is included in the permit package, designating this option. If the application is for a business or governmental agency, a principal of the company or organization must sign, date, and indicate their title where requested.

   b. **Contractor's Information Block:** Complete the respective items as requested. If a contractor has not been chosen, list "to be determined". If the applicant intends to perform the work, list "same as applicant". A contractor employed by an applicant cannot sign the application unless a written statement form the property owner is attached (see item "a" above).

   c. **Highway/Trunkline Number:** Insert the highway route (M-18, US-27, etc.)

   d. **City or Township, Section, Town, Range, & County:** Complete with respect to location of the proposed work (a plat book is probably most helpful for these items).

   e. **Nearest Crossroad:** List the name of the nearest roadway along the highway route as it appears on a road sign indicating such name. (Do not use a road that has no sign identifying it's name, or a local road name not listed on the respective sign).

   f. **Distance to Nearest Crossroad:** Indicate the direction from the proposed work site to the nearest crossroad in feet, meters, kilometers, etc. Please be specific when noting this distance and do not estimate.

   g. **Direction to Nearest Crossroad:** Indicate the direction from the proposed location to the nearest crossroad used as your reference point.

   h. **Proposed Start & Completion Dates:** A realistic start date will be some 4 to 6 weeks following receipt of your application (during peak construction times) as a field review must be performed prior to the issuance of the permit. The chosen completion date should reflect sufficient time to allow for restoration work (vegetation growth) within the highway right-of-way.

   i. **Plans Attached:** This refers to any drawings, specifications, and details needed to completely describe the proposed work. This entry should be of such completeness that anyone reviewing the application will have a clear picture of what is being proposed. Please remember to submit restoration plans for disturbances within the highway right-of-way (typically topsoil, seed, fertilizer, and mulch).

   j. **Purpose:** Indicate the type of work being proposed (sanitary sewer installation, storm sewer installation, water main installation, lengths and types of utilities to be installed, highway lane widening, minor grading work, tree removal, planting, drive installation, etc.).

PERMIT PLAN FOR RURAL AND URBAN RESIDENTIAL DRIVEWAYS

Michigan Department of Transportation
2205A (11/87)

(See Reverse for General Requirements)

THIS FORM CANNOT BE USED FOR COMMERCIAL DRIVEWAYS.

(OFFICE USE ONLY)	
APPLICATION NUMBER	
NAME	DATE

INSTRUCTIONS
1) Show dimensions on applicable sketch below. See table for a guide to proper dimensions.
2) Show distances to nearest foot, angles to nearest 10 degrees. Sketches below are not to scale.
3) Fill in surfacing and drainage requirements.
4) Attach this form to Form 2205.

CURBED HIGHWAY

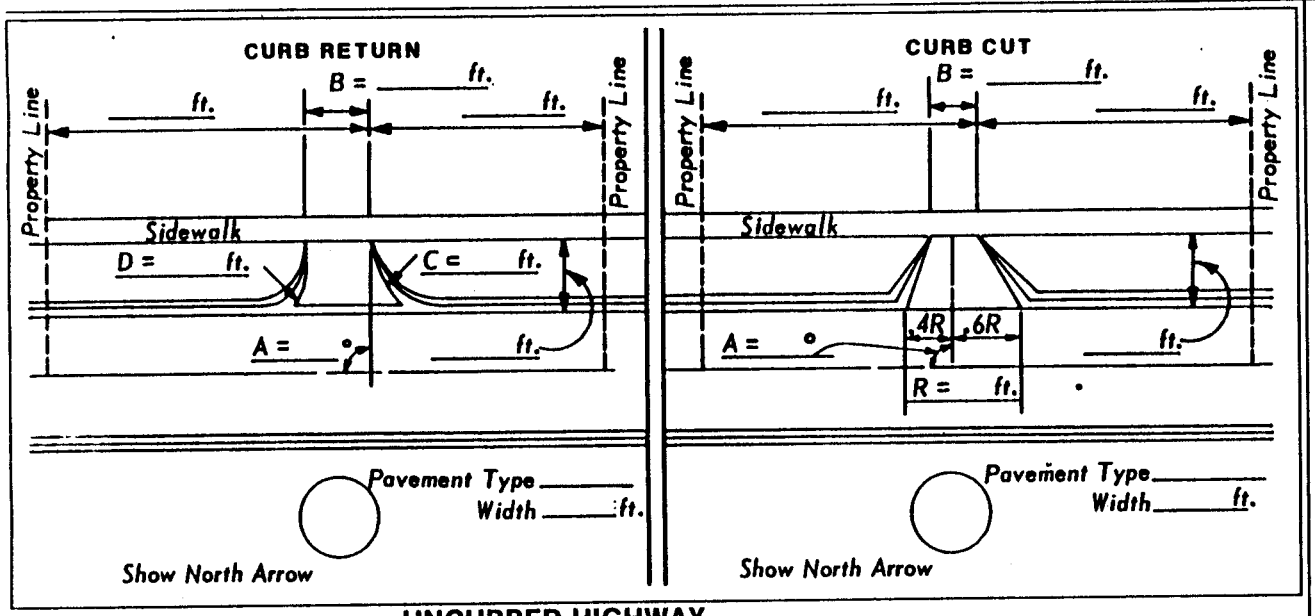

UNCURBED HIGHWAY

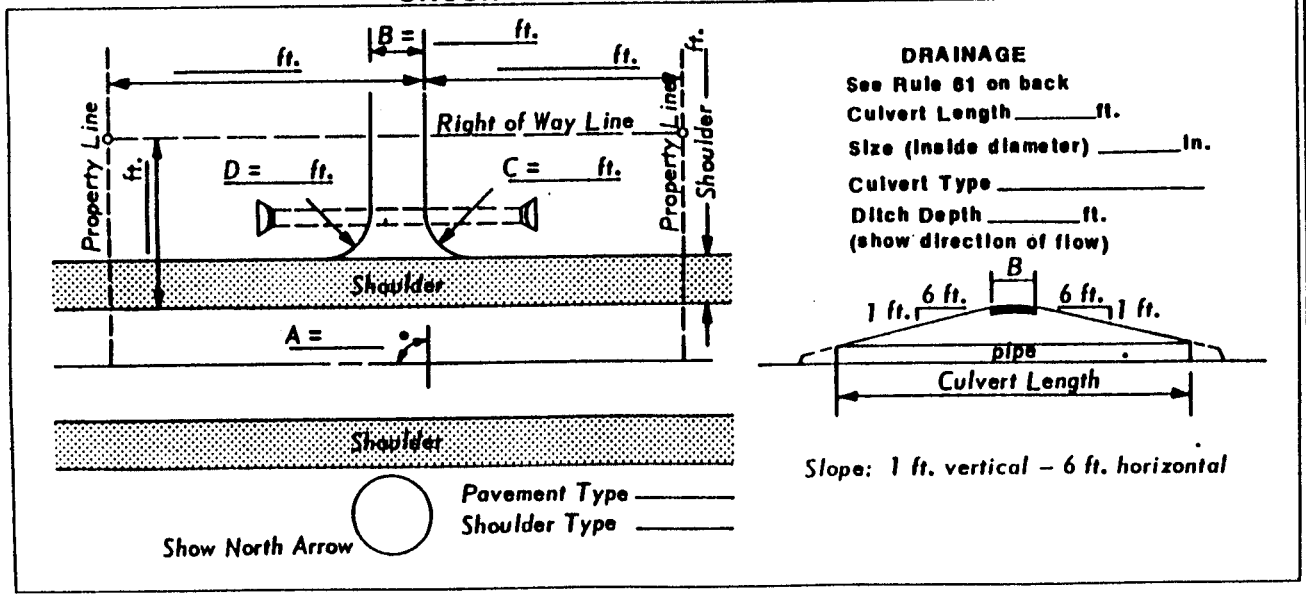

DRIVEWAY SURFACING

See Rules 51, 52, and 53, on back, for requirements.

6 in. ★ unreinforced portland cement concrete
2 in. ★ Bituminous mix over compacted gravel
Stabilized gravel ★★
Sod ★★
Other (Describe) _____

★ Increase thickness if trucks or frequent use of driveway is expected.

★★ This surface treatment not permitted on some driveways. See rules on back.

DIMENSIONS

RESIDENTIAL DRIVEWAY

Design Features		Cubed Highway		Uncurbed Highway	
		Standard	Range	Standard	Range
Intersecting Angle	A	90°	70 to 110°	90°	70 to 110°
Driveway Width	B	10 ft.	8 to 24 ft.	12 ft.	8 to 24 ft.
Entering Radius	C	15 ft.	5 to 15 ft.	15 ft.	5 to 20 ft.
Exiting Radius	D	6 ft.	5 to 15 ft.	10 ft.	5 to 20 ft.
Curb Cut	R	26 ft.	20 to 40 ft.	not applicable	

FIELD ENTRANCE AND UTILITY STRUCTURE DRIVEWAY

Design Features		Cubed Highway		Uncurbed Highway	
		Standard	Range	Standard	Range
Intersecting Angle	A	90°	70 to 110°	90°	70 to 110°
Driveway Width	B	20 ft.	15 to 40 ft.	20 ft.	15 to 40 ft.
Entering Radius	C	not applicable		20 ft.	5 to 40 ft.
Exiting Radius	D	not applicable		20 ft.	5 to 40 ft.
Curb Cut	R	26 ft.	20 to 50 ft.	not applicable	

The standard shall be used unless engineering judgment determines that another dimension within the range is more suitable for a particular site or special condition and is approved by the Michigan Department of Transportation.

General Requirement

This driveway must be constructed, used, and maintained in accordance with the Administrative Rules Regulating Driveways, Banners, and Parades On and Over Highways, by the Michigan Department of Transportation, as required by Act 200 of 1969. Excerpts from these rules follow:

Rule 14. (4) Future changes in the use of property abutting a highway, such as a change from residential to commercial use . . . may require changes in the number, design, or location of driveways . . . . The property owner then shall obtain a new permit from the department.

Location

Rule 31. (1) A Driveway shall be so located that no undue interference with the free movement of highway traffic will result. A driveway shall be so located also to provide the most favorable vision and grade conditions possible for motorists using the highway and the driveway consistent with development of the site considering proper traffic operations and safety.

(2) A driveway, including the radii but not including the right-turn lanes and tapers, shall be located entirely within the area between the permittee's property lines extended to the centerline of the highway. A driveway radius may extend outside of that area only if the adjacent property owner certifies in writing that he will permit such extension . . . .

Definitions

Circle Driveway: A private driveway that enters and leaves private property at 2 points within the same frontage.

Field Entrance: A driveway serving a farmyard, cultivated or uncultivated field, timberland or undeveloped land not used for industrial, commercial or residential purposes.

Residential Driveway: A driveway serving a private home.

Utility Structure Driveway: A driveway serving a utility structure such as a pumphouse or substation which operates automatically and requires only occasional access.

Number of Driveways

Rule 47. The number of residential driveways permitted shall be determined as follows:

(a) One residential driveway shall be permitted for each platted lot or for unplatted residential property with less then 100 feet of frontage.

(b) One additional residential driveway may be permitted for residential property for each 70 feet of frontage in excess of the first 100 feet of frontage.

(c) Two residential driveways may be permitted on the same property, in lieu of the requirements of paragraph (b), to serve a circle driveway if the frontage of the property is 80 feet or more.

(d) Residential driveways on the same property shall be at least 45 feet apart, center-to-center.

Rule 49. (1) One field entrance may be permitted for each 1000 feet of frontage of cultivated land, timber land or undeveloped land. Additional driveways may be permitted when a single driveway will not provide adequate access due to topographic conditions . . . .

Surfacing

Rule 51. If a highway is curbed, the following driveway, surfacing and curbing requirements apply:

(b) A residential driveway shall be paved between the edge of the pavement and the existing or proposed sidewalk. If there is no existing or proposed sidewalk, the surfacing shall extend at least 10 feet from the edge of the pavement. For a residential driveway, either curb cuts or curb returns shall be required as determined by the department, based on the current department standards for curb and gutter.

Rule 52. If a highway is uncurbed, the following driveway surfacing and curbing requirements apply:

(c) A residential driveway may be paved or surfaced with stablized gravel and may be curbed or uncurbed.

Rule 53. A field entrance or a utility structure driveway may be surfaced with stablized gravel or with sod over a stable base and may be uncurbed, as determined by the department.

Drainage

Rule 61. (1) A driveway shall be constructed so that it does not adversely affect the highway drainage. The drainage and the stability of the highway subgrade shall not be altered by driveway construction or roadside development . . . .

(3) Culvert pipe shall be of a size adequate to carry the anticipated natural flow of the ditch. The culvert shall be no smaller than the nearest upstream culvert nor less than 12 inches inside diameter. A culvert, catch basin, drainage channel and other drainage structure required within the highway right-of-way shall be manufactured or constructed and installed in accordance with the current department Standard Specifications for Highway Construction. The minimum length of the culvert may be determined as the sum of the distance between driveway edges, measured along the ditch line, plus the distances needed to accommodate an embankment slope not to exceed 1 foot vertical for 6 feet horizontal on both sides of the driveway.

Driveway Profile

Rule 63. A driveway profile shall be determined using the following criteria:

(a) If the highway is uncurbed, the grade of the driveway between the highway edge of pavement and the edge of the shoulder shall conform to the slope of the shoulder.

(b) If the highway is uncurbed or if the sidewalk is more than 10 feet from the edge of the pavement or if there is no sidewalk . . . .

(ii) The grade of a residential or utility structure driveway or field entrance shall not exceed 10%.

(c) If the highway is curbed and if the sidewalk is 10 feet or less from the edge of pavement, the grade of a driveway, except a directional driveway, shall be the grade required to meet the sidewalk elevation; but if that grade would exceed the maximums specified in paragraph (b), the sidewalk shall be either tilted or inclined.

(e) Vertical curves, with a minimum length of 15 feet, shall be provided at a change of grade of 4% or more.

(f) If the sidewalk elevation has to be adjusted to meet the driveway, the department may require that the sidewalk be inclined at a rate not to exceed 1 foot vertical for every 24 feet horizontal.

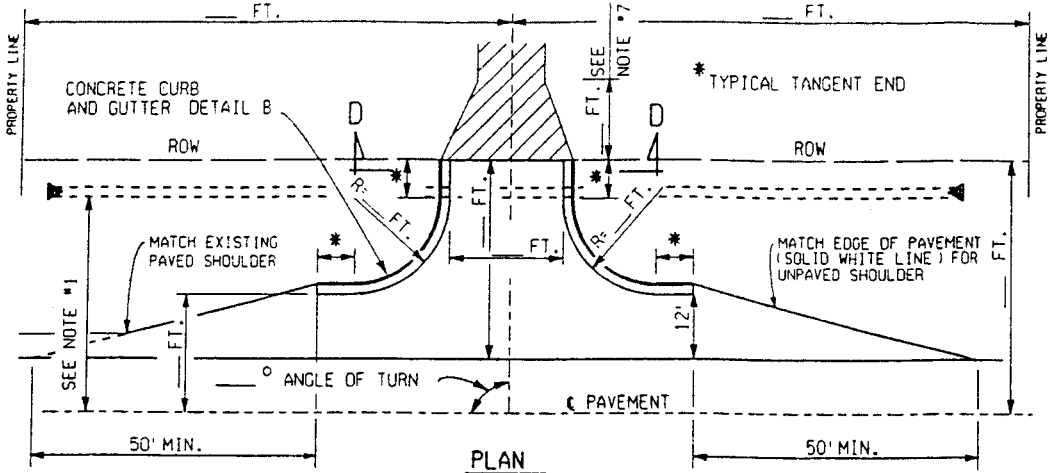

PLAN

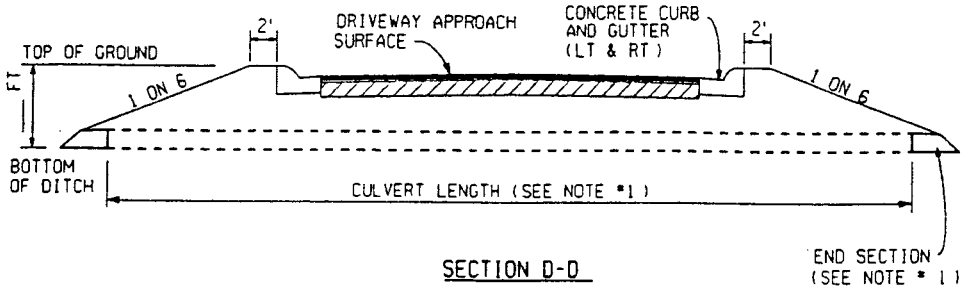

SECTION D-D

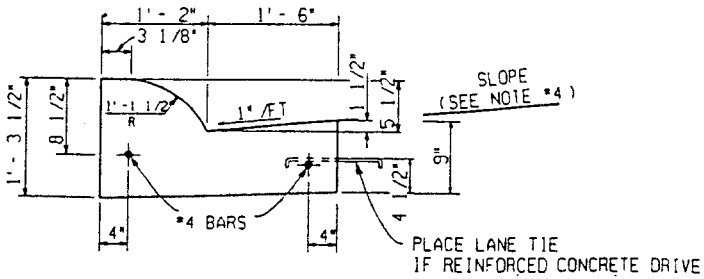

CONCRETE CURB AND GUTTER DETAIL B

CONCRETE REQUIRED 0.0900 CYD/LFT

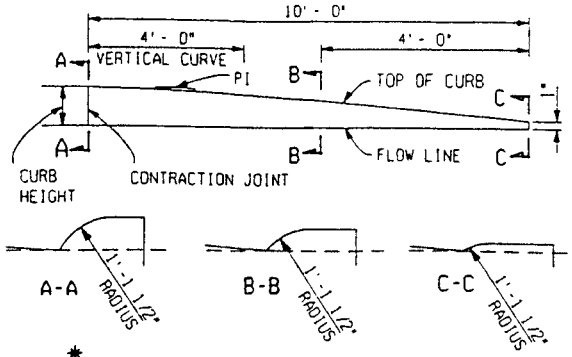

*TYPICAL TANGENT END OF CURB DETAIL

NOTES:

1. PLACE ___ LFT OF ___ INCH CULVERT ___ FEET FROM CENTERLINE OF PAVEMENT WITH END SECTION AT EACH END.
   GRATES SHOULD BE USED ON END SECTIONS FOR CULVERTS 18" AND LARGER WHICH ARE LESS THAN 30' FROM THE EDGE OF PAVEMENT. HEADWALLS SHALL NOT BE USED FOR DRIVEWAY CULVERTS.
2. THE SURFACE SHALL BE EQUAL TO OR BETTER THAN THE FOLLOWING:
   a. ___ INCH BITUMINOUS MIXTURE _____ TOP
      ___ INCH BITUMINOUS MIXTURE _____ LEVELING
      ___ INCH BITUMINOUS MIXTURE _____ BASE
      ___ INCH COMPACTED GRAVEL OR CRUSHED STONE
      ___ INCH SUBBASE COMPATIBLE WITH THAT USED ON THE HIGHWAY
   b. ___ OF REINF CONCRETE ON ___ INCH OF COMPACTED GRAVEL OR CRUSHED STONE AND ___ SUBBASE COMPATIBLE WITH THAT USED ON THE HIGHWAY.
   c. CONCRETE SHALL BE TYPE 35 P OR S AIR-ENTRAINED.
3. ALL WORK WITHIN THE RIGHT OF WAY SHALL BE DONE IN ACCORDANCE WITH CURRENT MICHIGAN DEPARTMENT OF TRANSPORTATION STANDARD SPECIFICATIONS FOR CONSTRUCTION AND ACCORDING TO THE ADMINISTRATIVE RULES OF ACT 200, P.A. OF 1969.
4. SLOPE DRIVEWAY APPROACH AWAY FROM PAVEMENT AT 1/2" /FT FOR 12 FEET.
5. DISTURBED AREAS SHALL BE RESTORED WITH TOPSOIL AND SEED OR SOD ONLY. MINIMUM OF 3 INCH TOPSOIL REQUIRED.
6. A DRIVEWAY SHALL BE CONSTRUCTED SO THAT IT DOES NOT ADVERSELY AFFECT THE HIGHWAY DRAINAGE. THE DRAINAGE AND THE STABILITY OF THE HIGHWAY SUBGRADE SHALL NOT BE ALTERED BY DRIVEWAY CONSTRUCTION OR ROADSIDE DEVELOPMENT.
7. CURB IS TO EXTEND TO ROW LINE OR A MINIMUM OF 10' BEYOND THE RADIUS OR AS DIRECTED BY THE ENGINEER.

MICHIGAN DEPARTMENT OF TRANSPORTATION

PERMIT NO. _____
TRUNKLINE _____
NAME OF PERMIT APPLICANT _____

DESIGN GUIDE FOR PERMITS FOR
COMMERCIAL DRIVEWAY UNCURBED TRUNKLINE

PLAN		SHEET
DATE 03-21-91	PA-02	1 OF 1

UTILITIES PERMITS DIVISION

SECTION 7.1A US-27 CORRIDOR/SUBAREA ACCESS MANAGEMENT PLAN - SITE PLAN STANDARDS

SECTION 7.1A.1 INTENT AND PURPOSE

The US-27 Corridor/Subarea Access Management Plan - Site Plan Standards are intended to regulate the number and location of access points for a specified area along this important arterial roadway. The US-27 Corridor/Subarea Access Management Plan includes a non-expressway section which serves as the primary north-south route through the township prior to construction of the controlled access US-27 expressway.

These standards are intended to promote realization of the recommendations of the DeWitt Township US-27 Corridor/Subarea Access Management Plan. The US-27 Corridor/Subarea Access Management Plan demonstrates that regulations on the number and placement of access points can assist in preserving the traffic capacity of the roadway and lessen the potential for accidents.

The standards of this Section are further intended to:

- minimize disruptive and potentially hazardous traffic conflicts thereby reducing the frequency of fatal, injury and property damage accidents;
- separate traffic conflict areas by reducing the number of direct access points;
- provide efficient spacing standards between access points and between access points and intersections;
- establish uniform access standards to ensure fair and equal application;
- implement the goals and recommendations of the Township Comprehensive Development Plan;
- implement the recommendations of the DeWitt Township Access Plan for the US-27 Corridor/Subarea Access Management Plan;
- protect the substantial public investment in the roadway system by preserving capacity and avoiding the need for unnecessary and costly reconstruction which disrupts business;
- maintain and expand the current service drive system;
- require coordinated access among several landowners;
- ensure reasonable access to properties, though the access may not always be direct access;
- coordinate township decisions on development proposals with access permit decisions by the Michigan Department of Transportation and the Clinton County Road Commission.

SECTION 7.1A.2 DEFINITIONS

1) ACCESS POINT: An access point includes vehicular access (driveway, private road or public road) except those serving one (1) or two (2) dwelling units, or serving an essential public service utility structure.

2) CORRIDOR: The US-27 roadway (nonexpressway) from Solon Road north to Webb Road, and a section of Clark Road east and west of US-27, including the street right-of-way and lands on both sides, as identified in the DeWitt Township US-27 Corridor/Subarea Access Management Plan.

3) CORRIDOR PLAN: The US-27 Corridor/Subarea Access Management Plan adopted by the DeWitt Township Planning Commission. The Corridor Plan documents rationale for this Section and illustrates existing and recommended location of access points and service drives.

4) ROAD AGENCY: The agency with jurisdiction within the public street right-of-way, either the Clinton County Road Commission or the Michigan Department of Transportation.

5) SERVICE DRIVE: A drive designed to provide shared access to specific access points along the arterial roadway to one or more developments within the corridor. A service road is generally parallel to the arterial road along either the front or rear of a site, but may be perpendicular or have another alignment. Service roads may be in front of, or along the rear of, buildings fronting US-27.

SECTION 7.1A.3 APPLICATION OF STANDARDS

The standards of this section shall apply to any project within the US-27 Corridor/Subarea Access Management Plan area undergoing site plan review and subdivision approval. The access standards of this Section are applied simultaneously with the standards of the underlying zoning district for uses and dimensional requirements listed in the Schedule of Regulations. The standards shall also be applied to any existing site which is proposed for redevelopment or a change in use, to the extent possible, as determined by the Planning Commission based on the standards of Section 7.1A.8.

The standards herein are based on extensive traffic analysis of this corridor by the Township and the State. This analysis demonstrates the combination of roadway design, traffic speeds, traffic volumes and other characteristics necessitate special access standards. Therefore, the access standards herein may be more restrictive than those provided by the Clinton County Road

Commission or the Michigan Department of Transportation. If there is a conflict with the access standards of the agency having jurisdiction within the roadway right-of-way the more restrictive standards, as determined by the Township Planning Commission with input from the road agency, shall apply.

SECTION 7.1A.4 SPECIAL APPROVAL PROCESS FOR PROJECTS WITHIN THE US-27 CORRIDOR/SUBAREA ACCESS MANAGEMENT PLAN

In order to help assure consistent review by the Township and the road agency, the following procedure shall be followed:

1) The applicant shall be required to submit a site plan or tentative preliminary plat concurrently to both the Township and the road agency. The road agency shall receive the plans at least twenty one (21) days prior to the Township Planning Commission meeting at which action may be taken.

2) The applicant shall also submit a written statement describing that the access for the proposed project is in compliance with the US-27 Corridor/Subarea Access Management Plan. If the proposed access for the site plan or subdivision plan is not in conformance with the Corridor Plan, as determined by the Zoning Administrator, a traffic impact study, as described in Section 7.1A.5 (5) shall be submitted to the township and road agency along with documentation from the road agency supporting the requested access design. The requirement for the submittal of a traffic impact study may be waived by the Board of Trustees as outlined in Section 7.1A.8 (7). (Amended, Ordinance No. 60.45)

SECTION 7.1A.5 NUMBER OF ACCESS POINTS

The number of commercial driveways serving a property shall be the minimum number necessary to provide reasonable access and access for emergency vehicles, while preserving traffic operations and safety along the public roadway. Access may be via an individual access point or shared access along a service drive.

One (1) access point along US-27 or along streets which intersect US-27 shall be permitted for each site plan or subdivision. The Township Planning Commission may require shared access or access via a service drive, as illustrated in the Corridor Plan. Additional access points may be permitted if one or more of the following applies:

1) One (1) additional access point along US-27 may be allowed for land with a continuous frontage of over eight hundred (800) feet, if the Planning Commission determines there are no other reasonable access opportunities, or

2) One (1) additional access point may be allowed along streets which intersect U.S. 27 for land with at least six hundred (600) feet of frontage along that street.

3) One (1) additional access point may be allowed if the land is a corner parcel with at least three hundred (300) feet of frontage along both public streets.

4) One way access points are discouraged (unless otherwise noted in the Plan) due to their conflict with the township goal to reduce the number of driveways.

5) The Planning Commission determines additional access is justified without compromising safety and traffic operations along the arterial based upon a traffic impact

study submitted by the applicant. The traffic impact study shall be reviewed and accepted by the road agency and the Township Planning Commission. The Township may utilize it's own traffic consultant to review the applicant's traffic study, with the cost of the review being borne by the applicant.

At a minimum, the traffic study shall contain the following:

a) Analysis of existing traffic conditions using current data.

b) Projected trip generation at the subject site or along the subject service drive based on the most recent edition of the Institute of Transportation Engineers Trip Generation manual. The Township or road agency may approve use of other trip generation data if based on recent studies of at least three (3) similar uses within similar locations in Michigan.

c) Illustrations of current and projected turning movements at access points. Capacity analysis shall be completed based on the most recent version of the Highway Capacity Manual and shall be provided in an appendix.

d) Statements describing how the additional access will meet the intent of this Section, will be consistent with the Corridor Plan, will not compromise public safety and will not reduce capacity or traffic operations along the roadway.

e) Qualifications and documented experience of the author, describing experience in preparing traffic impact studies in Michigan. The preparer shall be either a registered traffic engineer (P.E) or transportation planner with at least five (5) years of experience preparing traffic impact studies in Michigan. If the traffic impact study involves geometric design, the study shall be prepared or supervised by a registered engineer with a strong background in traffic engineering.

SECTION 7.1A.6 DRIVEWAY LOCATION AND SPACING

1) Driveways shall be located to minimize interference with the free movement of traffic, to provide adequate sight distance, and provide a favorable driveway grade.

2) Driveways, including the radii but not including right turn lanes, passing lanes and tapers, shall be located entirely within the right-of-way frontage, unless otherwise approved by the road agency and upon written certification from the adjacent land owner agreeing to such encroachment.

3) Access points along US-27 shall be spaced a minimum five hundred fifty (550) feet apart along the arterial and from any intersections, or as identified in the Corridor Plan. Measurements shall be from centerline of driveways and near edge of pavement for intersections.

4) Access points along the streets and private roads which intersect the arterial shall be spaced at least one hundred fifty (150) feet from the intersection (measured from the near edge to the nearest edge of pavement) and a minimum one hundred fifty (150) feet from other

driveways (measured from centerline to centerline) or as identified in the Corridor Plan. (Amended, Ordinance 60.42, Ordinance 60.49)

5) Access points shall be directly aligned with those across the Street or offset a minimum of one hundred fifty (150) feet along US-27 and a minimum one hundred fifty (150) feet along other streets and private roads. Longer offsets may be required depending on the expected inbound left-turn volumes of the driveways.

6) A service drive shall be constructed to provide access where recommended in the Corridor Plan or where the Planning Commission determines that reducing the number of access points may have a beneficial impact on traffic operations and safety while preserving the property owner's right to reasonable access. The service drive shall be designed and maintained according to Section 7.1A.7.

SECTION 7.1A.7 SERVICE DRIVES

Service drives shall be designed, constructed and maintained according to the following:

1) **Width:** minimum width of 24 feet (30 feet preferred), edge of pavement to edge of pavement.
2) **Easement**: the service drive shall be located within an access easement recorded with the Clinton County Register of Deeds.

3) **Construction materials:** per public street standards of the Clinton County Road Commission or MDOT.

4) **Access Points:** The number of accesses along a service road shall be according to the spacing standards of this Section, provided the Planning Commission may allow temporary access where the service drive is not completed if a performance bond or other financial guarantee is provided which assures elimination of the temporary access upon completion of the service drive, and ensures construction of the service drive at a future date determined by the Planning Commission.

5) **Access storage:** Each access point shall provide a minimum 80 feet of storage area near edge of pavement to nearest edge of pavement or as identified in the Corridor Plan.

6) **Parking and loading:** The service drive shall be posted on both sides that parking, loading and unloading are not permitted.

7) **Pavement markings:** Pavement markings may be required to help promote safety and efficient circulation. The property owner shall be required to maintain all pavement markings.

SECTION 7.1A.8 MODIFICATIONS AND VARIANCES

In the case of expansion, alteration or redesign of an existing development, or unique situations on a vacant parcel, where it can be demonstrated that conditions prohibit adherence to the minimum access point spacing standards of this Section, the driveway spacing requirements of this Section

may be modified.

The following criteria shall be considered by the Planning Commission in reviewing a reuse, redesign or expansions of an existing development, and by the Zoning Board of Appeals in reviewing a request for a variance.

1) Such modifications shall be the minimum amount necessary.

2) Such modifications will meet the intent of this Section and be consistent with the Corridor Plan to the extent possible.

3) In case of a reuse or expansion of an existing site, the Planning Commission may modify the standards of this Section if the use will be no more intense than the previous use in terms of traffic generation, based on a comparison of trip generation rates outlined in the most recent edition of the ITE Trip Generation manual and noted in a report prepared by a professional meeting the qualifications noted in Section 7.1A.5 (e).

4) In the case of a variance, there are practical difficulties unique to the parcel which make strict conformance to the standards of this Section unreasonable.

5) Such modification results from unique environmental conditions (wetlands or severe topography) on the site. The proposed access location would preserve the environmental character of the site and equal or improve public safety.

6) A traffic impact study has been provided as outlined in Section 7.1A.5 which supports the requested access design and demonstrates compliance with the above modification standards.

7) The requirement for the submittal of a traffic study may be waived by the Board of Trustees upon written application, and the submittal of the proposed site plan, to the Board of Trustees. Primary considerations for the granting of such a waiver include, but shall not be limited to: (Amended, Ordinance No. 60.45)

    a) The site under consideration will have no direct access to US-27.

    b) The site under consideration will have no access points which may directly impact traffic along US-27, such as creating traffic queues onto US-27.

    c) The speed limit along the street or service drive which the site under consideration will have access to is 25 mph.

GRAND BLANC CHARTER TOWNSHIP ZONING ORDINANCE
DRIVEWAY STANDARDS

SECTION 2700 - INTENT

The intent of this section is to establish standards for driveway spacing and the number of driveways for application during the site plan review process. The standards of this section are intended to promote safe and efficient travel within the township; minimize disruptive and potentially hazardous traffic conflicts; separate traffic conflict areas by reducing the number of driveways; provide efficient spacing standards between driveways, and between driveways and intersections; implement the Master Plan and the Hill Road Corridor Plan recommendations; protect the substantial public investment in the street system; and to ensure reasonable access to properties, though not always be the most direct access.

The standards herein apply to site plans and plats along roads which are under the jurisdiction of the Genesee County Road Commission or Michigan Department of Transportation (MDOT). Both of those agencies have driveway design and permit requirements, however, those general standards may not be sufficient to meet the particular traffic issues and objectives of Grand Blanc Township. Therefore, the driveway standards herein may be more restrictive than those provided by the road agencies.

Construction within the public right-of-way under the jurisdiction of Genesee County or MDOT still must also meet the permit requirements of the road agency. Where any conflicts arise, the more stringent standard shall apply.

SECTION 2701 DEFINITIONS

1. **Commercial Driveway:** For the purposes of this section, a commercial driveway is defined as any vehicular access except those serving one (1) or two (2) dwelling units or an essential public service use, building or structure.

2. **Offset:** The distance between the centerline of the subject driveway and the centerline of driveways on the opposite side of the street.

SECTION 2702 GENERAL STANDARDS FOR DRIVEWAY LOCATION

1. Driveways shall be located so as to minimize interference with the free movement of traffic, to provide adequate sight distance, and to provide the most favorable driveway grade.

2. Driveways, including the radii but not including right turn lanes, passing lanes and tapers, shall be located entirely within the right-of-way frontage, unless otherwise

approved by Genesee County and upon written certification from the adjacent property owner agreeing to such encroachment.

SECTION 2703 STANDARDS FOR THE NUMBER OF COMMERCIAL DRIVEWAYS:

The number of commercial driveways shall be the minimum necessary to provide reasonable access for regular traffic and emergency vehicles, while preserving traffic operations and safety along the public roadway. Additional driveways may be permitted for a property only under one of the following:

1. One (1) additional driveway may be allowed for properties with a continuous frontage of over three hundred (300) feet, and one (1) additional driveway for each additional three hundred (300) feet of frontage, if the Planning Commission determines there are no other reasonable access opportunities.

2. Two one-way driveways may be permitted along a frontage of at least one hundred twenty five (125) feet, provided the driveways do not interfere with operations at other driveways or along the street.

3. The Planning Commission may determine additional driveways are justified due to the amount of traffic generated by the use without compromising traffic operations along the public street, based upon a traffic impact study.

SECTION 2704 DRIVEWAY SPACING STANDARDS

1. **Between driveways:** The minimum spacing between two commercial driveways shall be determined based upon posted speed limits along the parcel frontage. The minimum spacings indicated below are measured from centerline to centerline.

Posted Speed Limit (MPH)	Minimum Driveway Spacing (In Feet)
25	125
30	155
35	185
40	225
45+	300

1. For sites with insufficient street frontage to meet the above criterion, the Planning Commission may require construction of the driveway along a side street, a shared driveway with an adjacent property, construction of a driveway along the property line farthest from the intersection or require a service/frontage road as described in Sections 2705 and 2706.

2. **Offsets:** To reduce left-turn conflicts, new commercial driveways should be aligned with driveways or streets on the opposite side the roadway where possible. If alignment is not possible, driveways should be offset a minimum of two hundred fifty (250) feet along an Arterial roadway and one hundred fifty (1 50) feet along other roadways. Longer offsets may be required depending on the expected inbound left-turn volumes of the driveways.

3. **Spacing from intersections:** Minimum spacing requirements between a proposed commercial driveway and an intersection either adjacent or on the opposite side of the street may be set on a case-by-case basis by the Planning Commission during site plan review but in no instance shall be less than the distances listed below. The following measurements are from the near edge of the proposed driveway, measured at the throat perpendicular to the street, to the near lane edge of the intersecting street or pavement edge for uncurbed sections.

MINIMUM COMMERCIAL DRIVEWAY SPACING FROM STREET INTERSECTIONS [1,2]

Location of Driveway	Min. Spacing for a full Movement Driveway	Min. Spacing for a Channelized Driveway Restricting Left Turns
Along Arterial or from Expressway Ramps	300 feet	300 feet
Along Arterial or from Intersecting Another Arterial	300 feet	125 feet
Along Arterial Intersecting a Collector or Local Street	200 feet	125 feet
Along a Collector	125 feet	75 feet
Along a Local Street or Private road	75 feet	50 feet

1 Regional Arterials, Arterials and Collectors are as classified in the Charter Township of Grand Blanc Master Plan. Thoroughfares and Secondary Thoroughfares are listed in the Township Master Plan. The classifications may be changed from time to time by the Genesee County Metropolitan Planning Organization.

2 For sites with insufficient street frontage to meet the above criterion, the Planning Commission may require construction of the driveway along a side street, a shared driveway with an adjacent property, construction of a driveway along the property line farthest from the intersection or require a service/frontage road as described in Sections 2705 and 2706.

SECTION 2705 STANDARDS FOR SHARED DRIVEWAYS AND SERVICE/FRONTAGE ROADS

The use of service roads, in conjunction with driveway spacing, is intended to preserve traffic flow along major thoroughfares and minimize traffic conflicts, while retaining reasonable access to the property. Where noted above, or where the Planning Commission determines that reducing the number of access points may have a beneficial impact on traffic operations and safety while preserving the property owner's right to reasonable access, access from a side street, a shared driveway or service road connecting two or more properties or uses may be required. In particular, service drives, frontage roads or at least a connection between uses may be required in the following cases:

1. Where the driveway spacing standards of this section can not be met.

2. Where recommended in the Hill Road Corridor Plan and other corridor or sub-area master plans.

3. When the driveway could potentially interfere with traffic operations at an existing or potential traffic signal location.

4. The site is along Regional Arterials or Arterials, particularly along segments experiencing congestion or a relatively high number of accidents.

5. The property frontage has limited sight distance.

6. The fire department recommends a second means of emergency access.

SECTION 2706 DESIGN STANDARDS FOR SERVICE DRIVES

Service roads as an alternate to numerous individual driveways serving a series of uses or lots shall be designed according to the following additional standards:

1. **Location:** Service roads shall generally be parallel or perpendicular to the front property line and may be located either in front of, adjacent to, or behind, principal buildings and may be placed in required yards. In considering the most appropriate alignment for a service road, the Planning Commission shall consider the setbacks of existing and/or proposed buildings and anticipated traffic flow for the site (service drives along Hill Road shall be designed in accordance with the adopted Hill Road Corridor site design standards).

2. **Access Easement:** The service road shall be within an access easement permitting traffic circulation between properties. This easement shall be at least forty (40) feet wide.

3. **Construction and Materials:** Service roads shall have a base, pavement, and curb and gutter in accordance with Township standards, except the width of the service road shall be twenty-six (26) feet wide, measured from curb edge-to-edge.

4. **Parking:** The service road is intended to be used exclusively for circulation, not as a parking maneuvering aisle. The Planning Commission may require the posting of "no parking" signs along the service road. In reviewing the site plan, the Planning Commission may permit temporary parking in the easement area where a continuous service road is not yet available, provided that the layout allows removal of the parking in the future to allow extension of the service road. Temporary parking spaces permitted within the service drive shall be in excess of the minimum required under Article 22, Parking and (Un)Loading Standards.

5. **Access** The Planning Commission shall approve the location of all accesses to the service/frontage road, based on the driveway spacing standards of this Article.

6. **Temporary Access:** The Planning Commission may approve temporary access points where a continuous service road is not yet available and a performance bond or escrow is created to assure elimination of temporary access when the service road is continued.

7. **Elevation:** The site plan shall indicate the proposed elevation of the service/frontage road at the property line and the Building Department shall maintain a record of all service road elevations so that their grades can be coordinated.

8. **Landscaping:** The greenbelt between a service road and the public street right-of-way shall be landscaped as specified in Section 2502 of the Landscaping Standards.

9. **Maintenance:** Each property owner shall be responsible for maintaining the service/frontage road.

SECTION 2707 COMMERCIAL DRIVEWAY DESIGN

Commercial driveways shall be designed according to the standards of the Genesee County Road Commission and in accordance with the following:

1. For high traffic generators, or for commercial driveways along roadways experiencing or expected to experience congestion, all as determined by the Planning Commission, two egress lanes may be required (one a separate left turn lane).

2. Where a boulevard entrance is desired by the applicant or Planning Commission, a fully curbed island shall separate the ingress and egress lanes. The radii forming the edges on this island shall be designed to accommodate the largest vehicle that will normally use the driveway. The minimum area of the island shall be one hundred eighty (180) square feet. The Planning Commission may require landscaping on the section outside the public right-of-way. Such landscaping shall be tolerant of roadway conditions. Direct alignment of boulevard entrances is discouraged.

SECTION 2708 MODIFICATION OF STANDARDS FOR SPECIAL SITUATIONS

During site plan review the Planning Commission shall have the authority to modify the standards of this Article upon consideration of the following:

1. The standards of this section would prevent reasonable access to the site.

2. Access via a shared driveway or service/frontage road is not possible due to the presence of existing buildings or topographic conditions.

3. Roadway improvements (such as the addition of a traffic signal, a center turn lane or bypass lane) will be made to improve overall traffic operations prior to project completion, or occupancy of the building.

4. The use involves the redesign of an existing development or a new use which will generate less traffic than the previous use.

5. The proposed location and design is supported by the Genesee County Road Commission as an acceptable design under the conditions. The Planning Commission may also request the applicant provide a traffic impact study in accordance with Section 332 to support the requested access design.

6. The modification shall be of the minimum amount necessary, but in no case shall spacing of a full-access driveway be less than sixty (60) feet, measured centerline to centerline.

Disk: Gdblanc.doc

CITY OF HUDSONVILLE, MI

Section 9-3

Driveway/Curb-Cut Permit Required

The construction of any new driveway or the creation of any new curb-cut shall require that a permit be obtained from the Zoning Administrator.
When a curb cut is issued, existing curb cuts that are no longer in use shall be filled in with curb and gutter pursuant to City standards. Curb and gutter shall be installed together as one unit.
The Zoning Administrator may waive or vary this curbing requirement where unique circumstances exist.

Section 9-4

Driveway Location Standards

A. Purpose

Driveway spacing simplifies driving by reducing the amount of information a driver must process and react to. Locating a driveway away from the operational area of a signalized intersection decreases the potential for congestion and accidents for both through-traffic and vehicles using the driveway. Adequate spacing between driveways and unsignalized roadways or other driveways can reduce confusion. Inadequate spacing requires drivers to watch for ingress and egress traffic at several points, while simultaneously trying to control their vehicle and monitor other traffic ahead of and behind them.

B. Commercial Driveways

1. Driveways shall be located so as to limit undue interference with the free movement of road traffic, to provide the required sight distance, and to provide the most-favorable driveway grade.

2. Driveways, including the radii, but not including right-turn lanes, passing lanes, and tapers, shall be located entirely within the applicant's right-of-way frontage. This right-of way frontage is determined by projecting the lot lines to the edge of pavement of the road. Encroachment of curb and radii on adjacent right-of-way frontage shall be permitted only upon written certifications

from the adjacent property owner(s) (agreeing to such encroachment) and/or when the city. has determined that such encroachment is necessary to preserve safe roadway conditions.

3. Driveways shall not be constructed along the acceleration or deceleration lanes and tapers connecting to interchange ramp terminals. '

4. Minimum spacing requirements between a proposed driveway and an adjacent intersection shall be those listed in Table 9.1 and 9.2. Spacing requirements will vary depending upon the roadway classification (see Figure 9.1) and intersection control. The spacing measurements in Table 9.1 and Table 9.2 are from the center line of the proposed driveway to the near right-of-way of the intersecting street.

5. In those cases where an intersection setback for a driveway cannot be met, the Planning Commission may require that the drive be constructed on an alternative street, or be provided through a shared driveway which meets the applicable intersection setback. Where no other alternatives exist, the Planning Commission may allow construction of the drive along the lot line farthest from the intersection.

Table 9.1 Minimum Driveway Spacing Between Commercial Driveways and Adjacent Street Intersections Along Regional Arterials

Intersecting Street Classification	Minimum Distance To Full-movement Driveway	Minimum Distance to Channelized Driveway (Right In, Right Out)
Arterial	250 feet	100 feet
Signalized Non-Arterial	125 feet	75 feet
Other Street	100 feet	75 feet

Table 9.2 Minimum Driveway Spacing Between Commercial Driveways and Adjacent Street Intersections Along Other Than Regional Arterials

Roadway Classification	Minimum Distance To Full-movement Driveway	Minimum Distance to Channelized Driveway (Right In, Right Out)
Arterial	200 feet	100 feet
Signalized Non-Arterial	100 feet	75 feet
Other Street	75 feet	75 feet

DRIVEWAY STANDARDS

FIGURE 9-1 **ROADWAY CLASSIFACTION MAP**

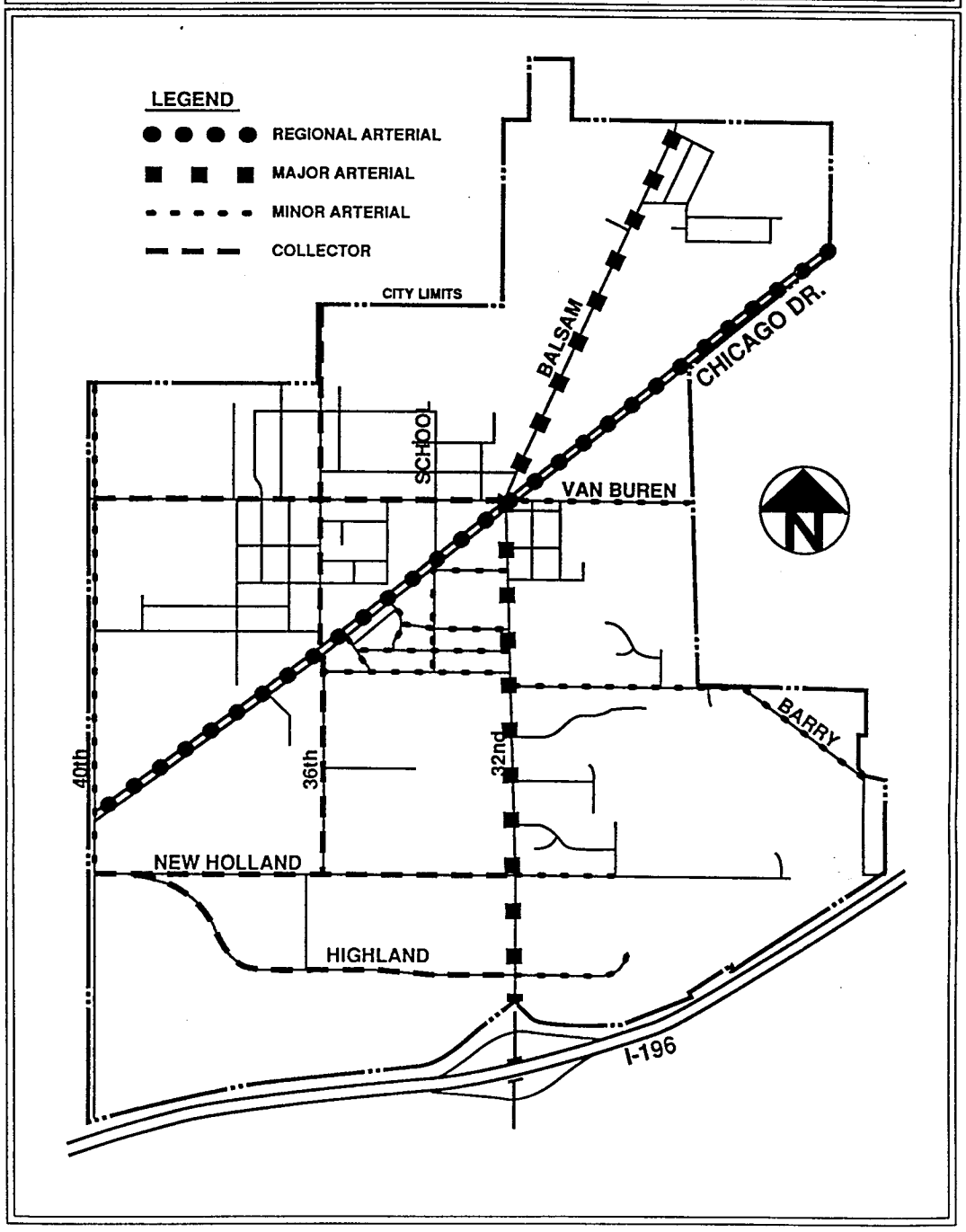

6. Driveway spacing requirements (distance between 2 driveways) shall be determined based upon posted speed limits. The driveway spacing indicated in Table 9.3 is measured from center line to center line. The Planning Commission may reduce the spacing distance requirements in Table 9.3, but in no case will the spacing be less than 80 percent of those figures.

7. For lots or parcels existing prior to the adoption of this ordinance, one driveway may be permitted for each separately owned parcel with less than 100 feet of frontage, provided that the parcel is wide enough for the minimum driveway *width*, plus the required radii. Where parcel size is insufficient, a shared driveway or other means of access may be required.

8. Additional driveways may be permitted for commercial property as follows:

a. one additional driveway may be allowed for a site with continuous *frontage* of 300 feet or more if no other access opportunities are available; or

b. two additional driveways may be allowed for a site with continuous *frontage* of 600 feet or more if no other access opportunities are available.

9. Additional access such as that outlined above may be allowed if the *applicant* provides justification based upon standard traffic engineering criteria that encompass analyses of *trip generation*, distribution, and level of service. The city has the final decision regardless of conclusions drawn from these analyses.

10. Two *commercial driveways* may be permitted, in lieu of the above, to serve as a one-way *circle drive* if the *frontage* is 125 feet or more.

Table 9.3 Driveway Spacing Requirements

Posted Speed	Driveway Spacing
25 mph	145 feet
30 mph	185 feet
35 mph	245 feet
40 mph	300 feet
45 mph	350 feet

11. To reduce left-turn conflicts, new driveways shall be aligned with those across the roadway where possible. If alignment is not possible, driveways should be *offset* a minimum of 150 feet from those on the opposite side of the roadway. Longer *offsets* may be required depending on the expected, inbound left-turn volumes of the driveways.

12. In the case of expansion, alteration or redesign of an existing development, where it can be demonstrated that pre-existing conditions prohibit adherence to the minimum driveway spacing standards, the city may modify the driveway spacing requirements. Such modifications shall be of the minimum amount necessary, but in no case shall spacing of a full-access driveway be less than 70 feet (center line to center line).

13. Adjacent property owners may, and are encouraged to, consolidate their driveways by using either a joint driveway system or a *frontage* road. All *frontage* roads are to be placed on private property outside of the *right-of-way. Easements* from participating *property owners* must be submitted to the city.

14. Requirements for minimum, corner or *intersection sight distance* for all road approaches shall be in accordance with American Association of State Highway and Transportation Officials (AASHTO) guidelines defined in Chapter 9 of A Policy on Geometric Design of Highways and Streets, 1984, as amended. Where special circumstances are present (*frontage* limitations, etc.), the minimum sight distances may be reduced to those shown in Table 9.4

Intersection sight distance will be measured 15 feet from the edge of pavement on paved roads. The eye height will be assumed to be 3.5 feet and the object height will be 3.5 feet if the above-reduced values are used.

15. All traffic signage and pavement markings at the proposed *commercial driveway* shall conform to the current Michigan Manual of Uniform Traffic Control Devices.

Table 9.4 Minimum Intersect Or Corner Sight Distances Under Special Circumstances

Posted Speed	Driveway Spacing
25 mph	145 feet
30 mph	185 feet
35 mph	245 feet
40 mph	300 feet
45 mph	350 feet

C. Residential, Utility, and-Field Driveways

1. One *residential driveway* shall be permitted for each platted *lot* or for unplatted residential property with less than 100 feet of *frontage.*

2. One additional *residential driveway* may be permitted along a local street for residential property with more than 120 feet of *frontage.*

3. In lieu of the above, two *residential driveways* may be permitted on the same property to serve as a one-way *circle driveway* if the *frontage* of the property is 100 feet or more along a local street.

4. Field-entrance and *utility-structure driveways* will be reviewed on a case-by-case basis. The city review will take into the proximity of the adjacent driveways and intersecting streets, as well as traffic volumes along the roadway.

5. *Residential driveways* shall be *setback* a minimum distance of 25 feet from any street intersection, measured from the closest point of the driveway approach to the closest *right-of-way line* of the intersecting street.

Section 9-5

Design Standards

The design features described herein and the tables with their appropriate illustration of various driveway features, as shown in Figures 9.2 through 9.12, shall be used by the *applicant* in designing proposed driveways or driveway systems. These standard dimensions shall be used, unless the city determines that conditions require a deviation or the *applicant* can demonstrate cause for deviation. The city reserves the right to determine whether this deviation shall be granted. In addition, based upon anticipated traffic volumes on the driveway(s) and the roadway, type of traffic to use the driveway, type of development, and other safety and operational considerations, the city may request changes or specify particular dimensions to ensure safe operations. Design dimensions for widths in the following figures are from edge of pavement to edge of pavement. They do not include curb or gutter.

A. Commercial Driveways

1. All *commercial driveways* shall be paved in their entirety, using either concrete or asphalt.

2. All *commercial driveways* shall be constructed with concrete curb and gutter along the entire required-entry and exit radii for the driveway.

3. Two-way, undivided *commercial driveways* shall be designed to accommodate at least 1 lane of traffic in each direction. The dimensions of a two-way commercial driveway shall conform to those given in Figure 9.2.

4. A *divided commercial driveway* shall have a curbed island (with concrete curb and gutter), separating the entrance drive and exit drive. The radii forming the edges on this island shall be designed to accommodate the largest vehicle that will normally use the driveway. The minimum area of the island shall be 180 square feet. Figure 9.3 illustrates the required dimensions for a *divided commercial driveway.*

5. The *applicant* is strongly encouraged to consider the benefits of auxiliary right-turn deceleration lanes and left-turn passing lanes. These additional lanes, located at the driveway, will enhance the accessibility, safety and image of the proposed development. Traffic volumes may warrant the prohibition of left-turns at driveways on two-way two-lane roads without passing lanes.

a. Figure 9.4 shows when the left-turn prohibition is warranted. The dimensions of left-turn passing lanes is illustrated in Figure 9.5.

b. Figure 9.7 shows when a right-turn deceleration lane and/or taper is warranted. Figure 9.6 illustrates the dimensions of right-turn deceleration lanes and tapers.

6. Under certain special conditions, a proposed driveway may fall within or be adjacent to a roadway width transition area (i.e. 2 lanes to 3 lanes). The city, in this case, may require the commercial right-turn lane and tapers and passing lane specified under subsection 5 above to be built in accordance with Figure 9.8. This configuration shall not be used unless specifically approved by the city, and will normally be specified under the following conditions:

a. The centerline of the proposed driveway is located within 250 feet of the end of the taper to the widening at a main road (mile type) intersection.

b. The main road intersection is painted for (or expected to be painted for) three-lane operation.

c. The main road is 40 feet or less in width.

ARTICLE 9

FIGURE 9-2 TWO-WAY COMMERCIAL DIMENSIONS

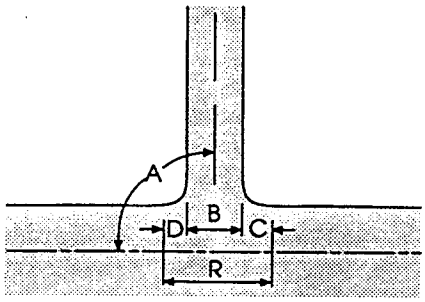

Design Features		Standard	Range
Intersecting Angle	A	90°	70° to 110°
Driveway Width	B	30'	25' to 39'[1]
Entering Radius	C	25'	25' to 40'
Exiting Radius	D	20'	20' to 35'
Total Opening B+C+D	R	75'	70' to 114'

[1] 39 feet for driveways with one inbound lane and two outbound lanes. 34 feet for two-lane driveways projected to experience high truck volumes.

Note: The standard dimension shall be used unless the city specifies or the applicant demonstrates technical justification for a different value. The range in dimensions indicates the working values for each design feature.

FIGURE 9-3 DIVIDED COMMERCIAL DRIVEWAYS

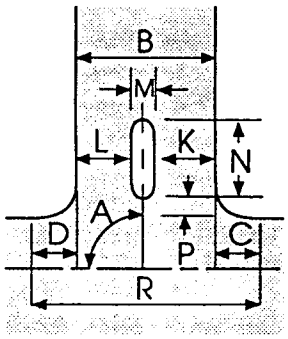

Design Features		Standard	Range
Intersecting Angle	A	90°	- - - -
Driveway Width	B	48'	46' to 78'
Entering Radius	C	25'	25' to 40'
Exiting Radius	D	20'	20' to 35'
Entrance Drive Width	K	16'	16' to 27'
Exit Drive Width	L	22'	20' to 27'
Island Width	M	10'	6' to 24'
Island Length	N	35'	30' to 100'
Nose Offset	P	12'	6' to 18'
Total Opening B+C+D	R	93'	71' to 142'

Note: The standard dimension shall be used unless the city specifies or the applicant demonstrates technical justification for a different value. The range in dimensions indicates the working values for each design feature.

FIGURE 9-4 **WARRANT FOR PERMITTING INBOUND LEFT TURNS (TWO-WAY, TWO-LANE ROADWAYS)**[1]

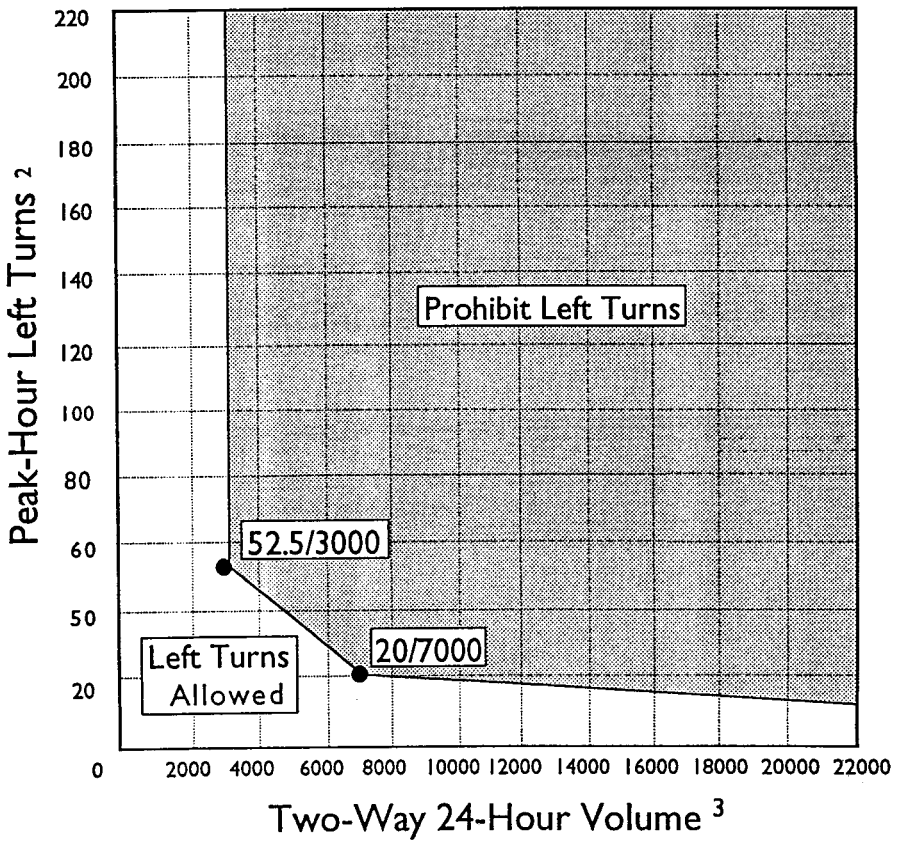

1 Where conditions indicate that left-turn ingress should be prohibited, the applicant will have the option of constructing a by-pass lane or designing the driveway to prohibit inbound left turns.

2. Left-turn volume into driveway based on total development trip generation and distribution analyses.

3. Based upon existing traffic volume data.

ARTICLE 9

FIGURE 9.5 **PASSING LANE**

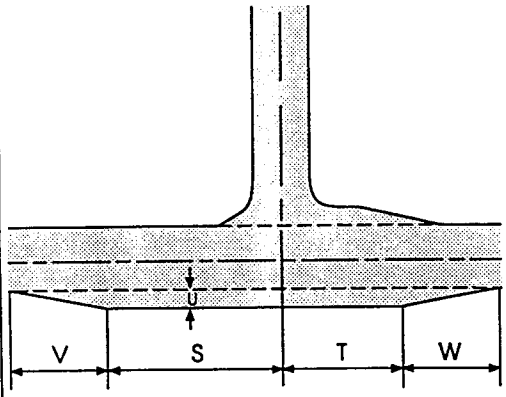

Design Features		Standard	Range
Approaching Taper	V	150'	100' to 150'
Departing Taper	W	150"	100' to 150'
Approaching Lane Length	S	150'	100' to 200'
Departing Lane Length	T	100'	50' to 100'
Passing Lane Width	U	12'	11' to 13'

Note: The standard dimension shall be used unless the city specifies or the applicant demonstrates technical justification for a different value. The range in dimensions indicates the working values for each design feature.

FIGURE 9.6 **COMMERCIAL RIGHT-TURN LANE AND TAPER**

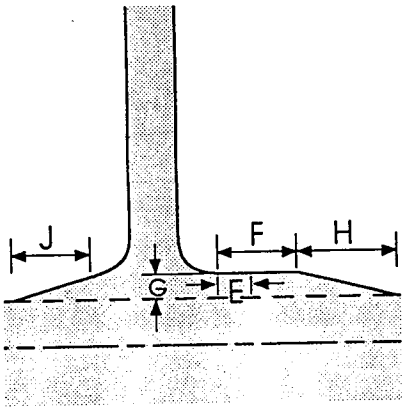

		Curbed Road		Uncurbed Road	
Design Features		Std.	Range	Std.	Range
Curb Ending	E	NA	NA	10'	None
Right-turn Lane Length[1]	F	25' 80'	0' to 150'	25' 80'	0' to 150'
Right-turn Lane Width	G	12'	11' to 14'	12'	11' to 14'
Entering Taper	H	100'	75' to 150'	100'	75' to 150'
Exiting Taper	J	0'	0' to 50'	50'	50' to 100'

[1] Right-turn lane length is based upon posted speed limit - standard length of 25 feet for less than or equal to 30 MPH, 80 feet for speed limits over 30 MPH.

Note: The standard dimension shall be used unless the city specifies or the applicant demonstrates technical justification for a different value. The range in dimensions indicates the working values for each design feature.

FIGURE 9-7 WARRANTS FOR RIGHT-TURN DECELERATION LANE OR TAPER

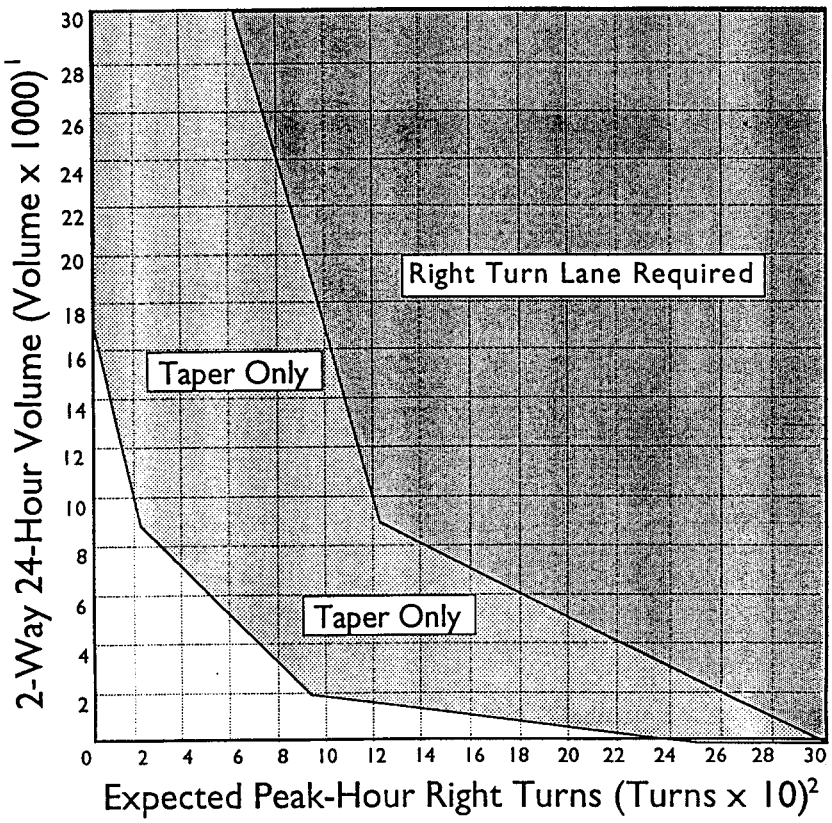

1. Based upon traffic volume data within the past year.

2. Based on recognized trip generation and distribution analyses.

d. Based upon warrants discussed in Section 9-5-A-5, a standard right-turn lane and a passing lane would be required to serve the driveway turning movements.

7. The dimensions of one-way *commercial driveway* systems shall conform to those given in Figure 9.9.

8. Directional commercial driveways are considered to be special cases, and each such driveway shall be designed individually. *Directional driveways* shall be designed to facilitate the desired turning movements and to discourage prohibited movement. Radii shall be, as approved by the city, based on the intersecting angle and the turning path of the largest vehicle that will normally use the driveway. Standard dimensions for a right-turn-in/right-turn-out-only driveway are shown in Figure 9.10.

9. *Clear vision areas* (triangular in shape) shall be maintained on both sides of all commercial drives. A *clear vision area* shall be determined using the following 3 points:

a. the point of intersection of the side line of a driveway projected to the roadway edge of pavement, and

b. 2 points, 25 feet in distance from that point of intersection. One shall be measured outward from the driveway along the edge of pavement. The other shall be measured along the side driveway line leading onto the subject property.

B. Residential, Utility, and Field Driveways

1. All residential and utility driveways shall be paved in their entirety, using either concrete or asphalt.

2. *Field driveways* shall only be required to be paved from the roadway edge of pavement to the roadway *right-of -way line*.

3. All residential, utility, and *field driveways* shall be constructed with concrete curb and gutter along the entire required entry and exit radii for the driveway if this portion of the driveway is to be paved with asphalt. Concrete curb and gutter shall not be required if this portion of the driveway is to be paved with concrete.

4. The dimensions of a *residential driveway* shall conform to those given in Figure 9.11.

5. Field entrances may be permitted for cultivated land, timber land, or undeveloped land. The dimensions of a field entrance and of a *utility-structure driveway* shall conform to those given in Figure 9.12.

6. *Clear vision areas* (triangular in shape) shall be maintained on both sides of all residential, utility, and field drives. A *clear vision area* shall be determined using the following 3 points:

a. the point of intersection of the side line of a driveway projected to the roadway edge of pavement, and

b. 2 points, 15 feet in distance from that point of intersection. One shall be measured outward from the driveway along the edge of pavement. The other shall be measured along the side driveway line leading onto the subject property.

ARTICLE 9

FIGURE 9-8 APPROACHING AND DEPARTING DRIVEWAY STANDARDS

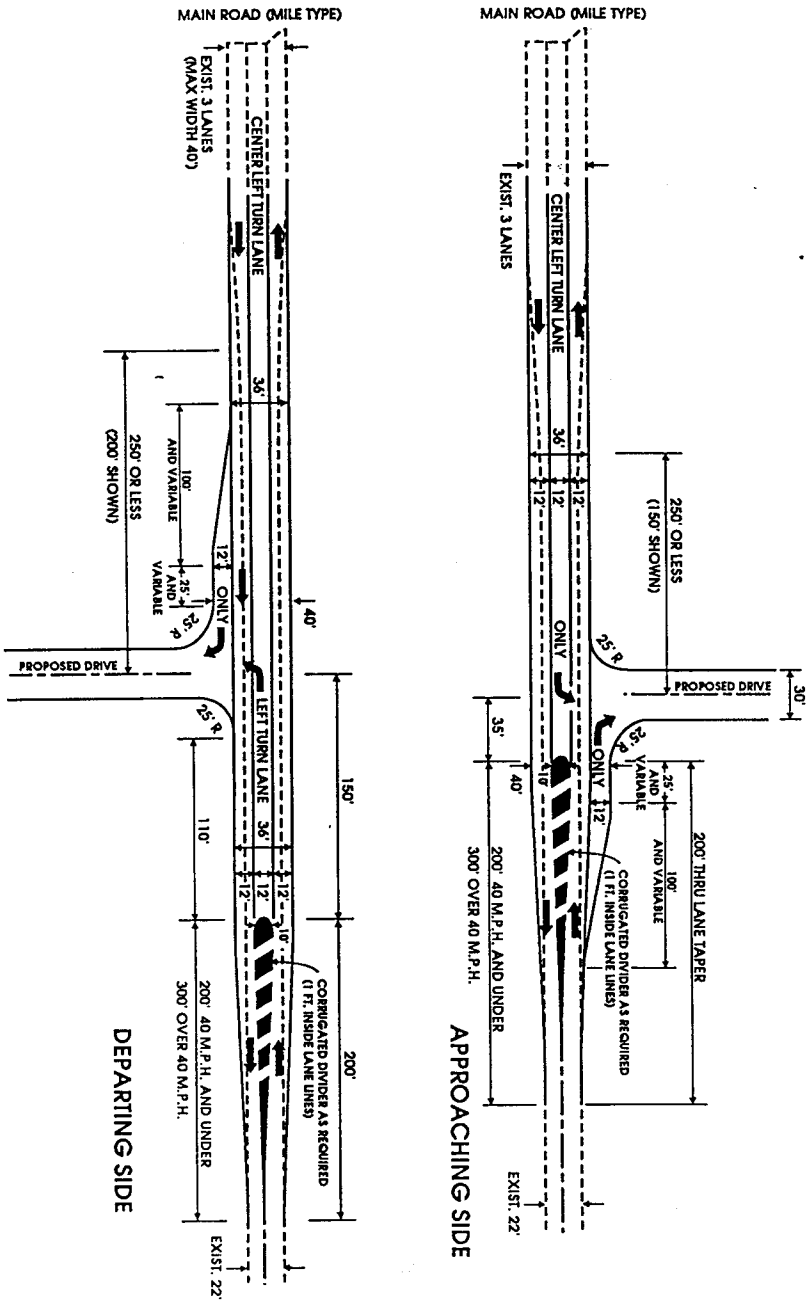

DRIVEWAY STANDARDS

FIGURE 9-9 ONE-WAY COMMERCIAL DRIVEWAYS

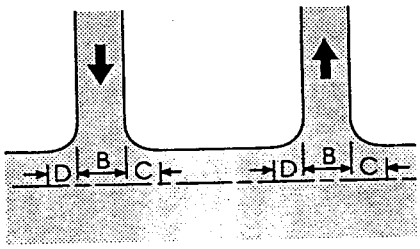

Design Features		Standard	Range
Intersecting Angle	A	90°	70° to 110°
Driveway Width	B	16'	16' to 25'
One-way In			
-Entering Radius	C	20'	20' to 35'
-Exiting Radius	D	5'	5' to 10'
One-way Out			
-Entering Radius	C	5'	5' to 10'
-Exiting Radius	D	20'	10' to 30'

Note: The standard dimension shall be used unless the city specifies or the applicant demonstrates technical justification for a different value. The range in dimensions indicates the working values for each design feature.

FIGURE 9-10 DIRECTIONAL DRIVEWAYS

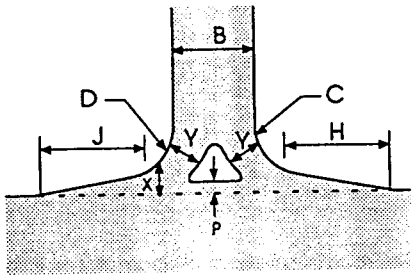

Design Features		Standard	Range
Driveway Width	B	30'	25' to 30'
Entering Radius	C	30'	25' to 40'
Exiting Radius	D	30'	25' to 35'
Entering Taper	H	75'	50' to100'
Exiting Taper	J	75'	50' to100'
Nose Offset	P	4'	4' to 10'
Taper Offset	X	12'	12'
Entering/Exiting Lane Width	Y	15'	14' to 18'

Note: The standard dimension shall be used unless the city specifies or the applicant demonstrates technical justification for a different value. The range in dimensions indicates the working values for each design feature.

ARTICLE 9

FIGURE 9-11 RESIDENTIAL DRIVEWAYS

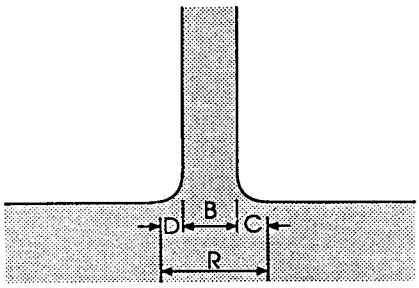

Design Features		Standard	Range
Intersecting Angle	A	90°	70° to 110°
Driveway Width	B	16'	10' to 25'
Entering Radius	C	10'	5' to 15'
Exiting Radius	D	10'	5' to 15'
Total Opening B+C+D	R	36'	20' to 55'

Note: The standard dimension shall be used unless the city specifies or the applicant demonstrates technical justification for a different value. The range in dimensions indicates the working values for each design feature.

FIGURE 9-12 FIELD ENTRANCE AND UTILITY STRUCTURE DRIVEWAYS

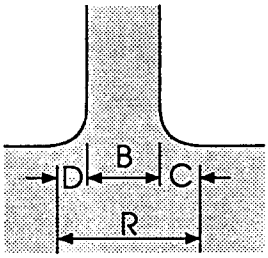

Design Features		Standard	Range
Intersecting Angle	A	90°	70° to 110°
Driveway Width	B	16'	12' to 35'
Entering Radius	C	10'	5' to 35'
Exiting Radius	D	10'	5' to 35'
Total Opening B+C+D	R	36'	22' to 105'

Note: The standard dimension shall be used unless the city specifies or the applicant demonstrates technical justification for a different value. The range in dimensions indicates the working values for each design feature.

Appendix A: Example Access Management Ordinance for a City

Summary

The following example access management ordinance has been adapted from the actual municipal ordinance of College Station, Texas. College Station's ordinance was determined to be one of the most comprehensive ordinances developed by a city for access management. The adapted code is provided to assist Iowa cities in developing access management ordinances. Although the code does not cover all access treatments discussed in this handbook, it does cover the most-used treatments. Municipalities are urged to tailor the code to meet local needs and develop additional code language as necessary.

Features of the example code include classification of roadways by function and requirements for sight distance, driveway spacing, maximum driveways per lot, corner lot access, corner clearance, shared (joint and cross) access, turn radius, driveway width, driveway throat length, and parking/loading. In summary:

Roadways are classified by the following functional categories:

1. Local Streets -- Streets that provide access to single family residential neighborhoods.
2. Collectors -- Streets that link Local Streets with the arterial system and serve residential areas primarily internal to one neighborhood.
3. Minor Arterials -- Streets that feed the major arterial system, support moderate length trips, and serve activity centers.
4. Major Arterials -- Streets and highways that provide service to traffic entering and exiting the city and between major activity centers within the city.

Major arterial, minor arterial, and collector streets should be indicated in a thoroughfare plan that maps roadways by their classification.

Driveway spacing is differentiated between drives on the same side and opposite side of the roadway as shown in Table A1:

Table A1—Minimum driveway spacing

Street Classifications	Minimum Adjacent Spacing (feet)	Minimum Opposite Right Spacing (feet)
Local Street	150	125
Collector	185	175
Minor Arterial	230	225
Major Arterial	275	300

Corner clearances must meet the minimum spacing standards for the roadway. When spacing standards cannot be met, additional standards are proposed.

Minimum driveway throat lengths, measured from curb line to first on-site conflict point, are as follows:

- collector - 25 feet (approximately 2 car lengths)
- minor arterial - 40 feet
- major arterial - 55 feet

Example Municipal Driveway Access Location and Design Ordinance

(1) General

(a) It shall be unlawful for any person to cut, break, or remove any curb along a street except as herein authorized.

(b) It shall be unlawful for any person to construct, alter, or extend, or permit or cause to be constructed, altered, or extended any driveway approach which can be used only as a parking space or area between the curb and private property.

(c) This section shall be deemed to be supplemental to other sections regulating the use of public property, and in case of conflict, this section shall govern.

(d) Adequate sight distance shall be provided for a passenger motor vehicle making a left or right turn exiting from a driveway. This determination shall be made by the city engineer.

(e) The specifications and guidelines set forth in this ordinance are to be applied to all roadways and properties that abut these roadways within the city, unless otherwise indicated.

(f) As determined by the city engineer, engineering judgment shall override the recommended dimensions set forth in this policy if warranted by specific traffic conditions.

(2) Location of Driveway Access

(a) In making a determination as to the location of driveway access, the city engineer shall consider:

(i) The characteristics of the proposed land use;

(ii) The existing traffic flow conditions and the future traffic demand anticipated on the development and the adjacent street system;

(iii) The location of the property;

(iv) The size of the property;

(v) The orientation of structures on the site;

(vi) The number of driveways needed to accommodate anticipated traffic;

(vii) The number and location of driveways on existing adjacent and opposite properties;

(viii) The location and carrying capacity of intersections;

(ix) The proper geometric design of driveways;

(x) The spacing between opposite and adjacent driveways;

(xi) The internal circulation between driveways; and,

(xii) The speed of the adjacent roadway.

(b) Driveway access to arterials shall not be permitted for parking or loading areas that require backing maneuvers in a public street right-of-way. Driveway access to collector streets for commercial or multifamily developments shall not be permitted for parking or loading areas that require backing maneuvers in a public street right-of-way.

(c) One curb cut shall be allowed for access to single family and duplex residential tracts. More than one curb cut may be allowed upon approval by the city engineer.

(d) For corner tracts, access to residential tracts shall be provided from the lesser (lowest classification) street. Access notes on plats shall supersede this requirement. The determination as to the lesser (or greater) street shall be based on the functional street classification.

(e) No cuts through a left turn reservoir of a median shall be permitted in order to provide for left turn movements to driveway approaches.

(f) Driveways in right turn lane transition areas shall not be permitted.

(g) When a commercial or multifamily development abuts more than one public street, access to each abutting street may be allowed only if the following criteria are met:

(i) It is demonstrated that such access is required to adequately serve driveway volumes and will not be detrimental or unsafe to traffic operations on public streets. The city engineer may require the submittal of a traffic study which demonstrates that such access is required.

(ii) The minimum requirements for corner clearance for commercial or multifamily driveways are met.

(3) Spacing of Driveway Access

(a) Application of the driveway access location and design policy requires identification of the functional classification of the street on which access is requested and then applying the appropriate spacing requirements. City streets are classified as follows:

(i) Major Arterial;

(ii) Minor Arterial;

(iii) Collector; and,

(iv) Local Street.

(b) Major arterial, minor arterial, and collector streets in the city are indicated on the Thoroughfare and Transportation Improvement Plan. The functional classification of any street in the city not indicated as an arterial or collector street on this plan shall be determined using the functional street classification defined by the American Association of State Highway and Transportation Officials (AASHTO) "green book", A Policy on Geometric Design of Highways and Streets.

(c) Driveway access spacing shall be measured from the centerline of the proposed driveway pavement to the nearest edge of the roadway of the adjacent or opposite driveway or street as indicated in Figure A1.

Figure A1—Measuring driveway access

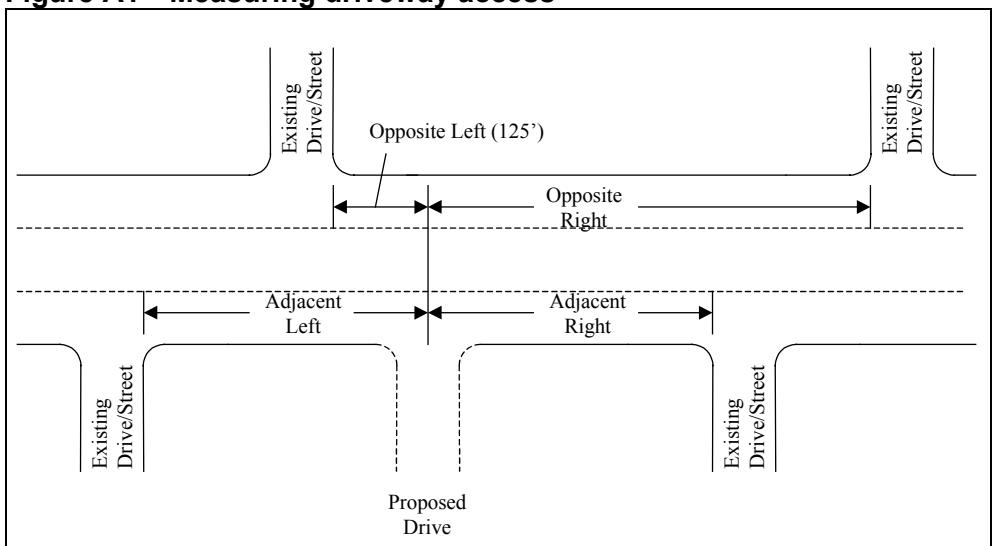

Note: The above roadway is hypothetical and could represent an arterial, collector, or local street.

(d) Opposite Right Driveways shall be located no closer than the minimum requirements of Table A2.

Table A2—Opposite right (downstream) drive spacing

Street Classification	Minimum Spacing (Feet)	Desirable Spacing* (Feet)
Major Arterial	300	400
Minor Arterial	225	350
Collector	175	300
Local Street	125	225

* Desirable spacing will be required except in older developments with insufficient frontage.

(e) Additional opposite right spacing over and above that set forth in Table A2 may be required if it is determined by the city engineer or his designee that there is insufficient left turn queue storage or weave maneuver area between the opposite right and proposed driveway. This determination shall be made under peak traffic conditions.

(f) A minimum of one hundred twenty-five feet (125') shall be required for Opposite Left Drives for all street classifications.

(g) If the centerline of an opposite drive is less than fifteen feet (15') from the centerline of the proposed drive, the drives form an intersection and the minimum spacing requirements shall apply for the closest drive.

(h) Adjacent drives shall be located no closer than the minimum requirements of Table A3.

Table A3—Adjacent drive spacing

Street Classification	Minimum Spacing (Feet)	Desirable Spacing* (Feet)
Major Arterial	275	350
Minor Arterial	230	300
Collector	185	235
Local Street	150	190

* Desirable spacing will be required except in older developments with insufficient frontage.

(4) Corner Clearance

Corner clearance for driveway access shall meet or exceed the minimum driveway spacing requirements for that roadway. When minimum spacing requirements cannot be met due to lack of frontage and all means to acquire shared access drives or cross access easements have been exhausted, the following requirements shall apply.

(a) At intersections of arterials with channelized right-turn lanes with yield control, a corner clearance distance in accordance with those set forth in Figure A2 shall be required for the first downstream driveway. This distance shall be measured from the channelized median to the nearest edge of the proposed driveway as indicated in Figure A2.

Figure A2—Downstream corner clearance

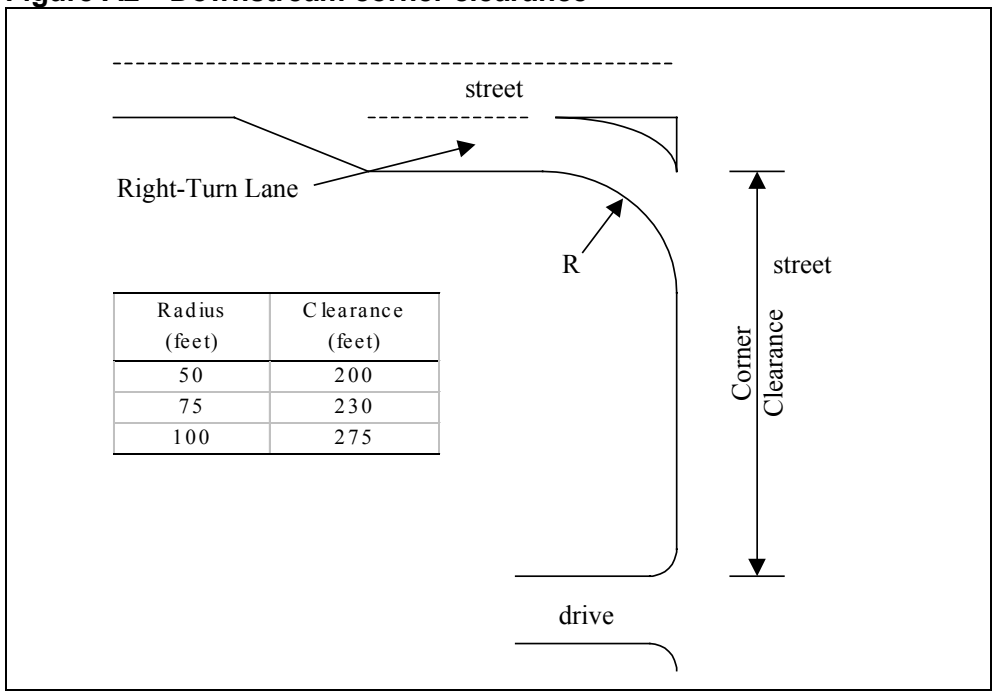

Radius (feet)	Clearance (feet)
50	200
75	230
100	275

(b) No driveway approach may be located closer to the corner than 30 feet on local streets, 75 feet on collector streets, 100 feet on minor arterials and 120 feet for major arterials. This measurement shall be taken from the intersection of property lines at the corner. When these requirements cannot be met due to lack of frontage, the driveway may be located such that the radius will begin at the farthest property line.

(5) Shared Access

(a) A joint private access easement may be required between adjacent lots fronting on arterial and collector streets in order to minimize the total number of access points along those streets and to facilitate traffic flow between lots. The location and dimensions of said easement shall be determined by the city engineer.

(b) Private cross access easements may be required across any lot fronting on an arterial or collector street in order to minimize the number of access points and facilitate access between and across individual lots. The location and dimension of said easement shall be determined by the city engineer.

(6) Geometric Design of Driveway Access

(a) All driveways shall meet the city's standard specifications for street construction and construction standards.

(b) Curb cuts for driveways shall not be permitted in the curb return of an intersection.

(c) The curb return radii for driveways intersecting at right angles with the roadway and without a deceleration lane shall be as follows:

(i) Curb return radii for residential (single family and duplex) driveways located on local or collector streets shall be between 2.5 feet and 10.0 feet as shown in Figure A3. Flare type residential driveways must also adhere to these dimensional criteria. Residential driveways located on arterial streets must adhere to the specifications set forth in 6(c)(ii).

(ii) Curb return radii for commercial and multi-family driveways shall vary between fifteen feet (15') and thirty feet (30') as shown in Figure A4.

(iii) Curb return radii for driveway types not included in (i) or (ii) above shall be determined by the city engineer.

(d) The maximum width of residential driveway approach, shown in Figure A3 and measured at the property line, shall not exceed twenty-eight feet (28') in width, while the minimum width shall not be less than ten feet (10') in width.

Figure A3—Residential driveway

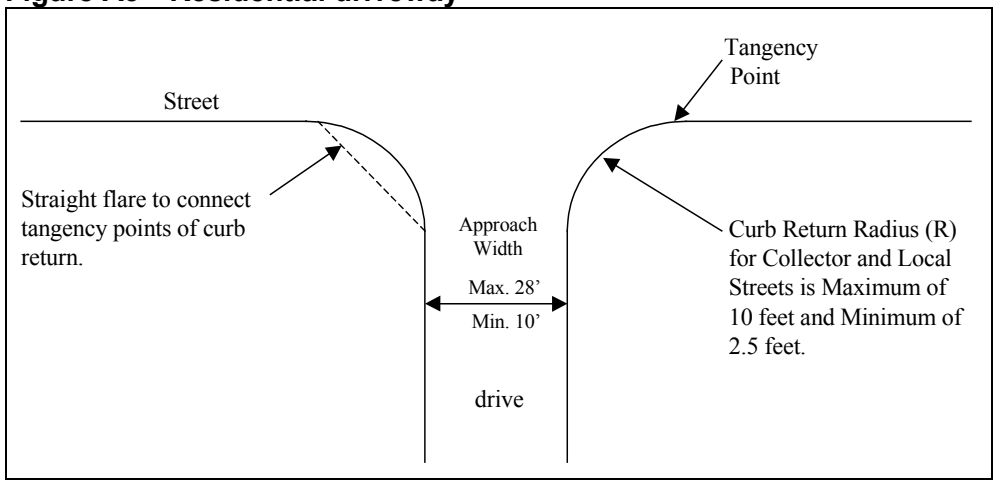

(e) The maximum width of a commercial and multi-family driveway approach for two-way operation, shown in Figure A4, shall not exceed thirty-six feet (36') except that the city engineer may issue permits for driveway approaches greater than thirty-six feet (36') in width on major streets to handle special traffic conditions. The minimum width of commercial and multifamily driveway approach for two-way operation shall not be less than twenty-four feet (24').

Figure A4—Commercial and multifamily driveway

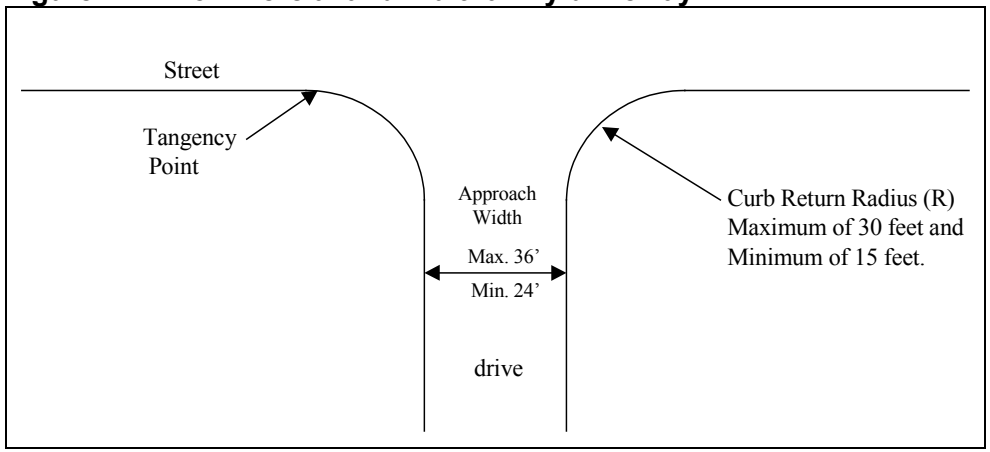

(f) The combination of two driveways for residential circular drives shall not exceed twenty-eight feet (28').

(g) The angle of driveway approach shall be approximately ninety degrees (90°) for two (2) way drives and between forty-five degrees (45°) and ninety degrees (90°) degrees for one way drives.

(h) A minimum driveway throat length of twenty-five feet (25') for collector streets, forty feet (40') for minor arterials, and fifty-five feet (55') for major arterials, as shown in Figure A5, may be required to allow for traffic entering the site to be stored on site in order to avoid a queue of traffic from the development from being out on the roadway causing delays to the through traffic stream. The driveway throat length shall be defined as the distance from the street to the first point of conflict in the driveway.

(i) For the benefit of traffic safety and flow on collector and arterial streets, access points may be required to be designed to prohibit certain types of turning movements (for example, left turns). Driveways not meeting the spacing guidelines in Tables A2 and A3 may be designed for limited access by the addition of a median to the driveway.

Figure A5—Access points

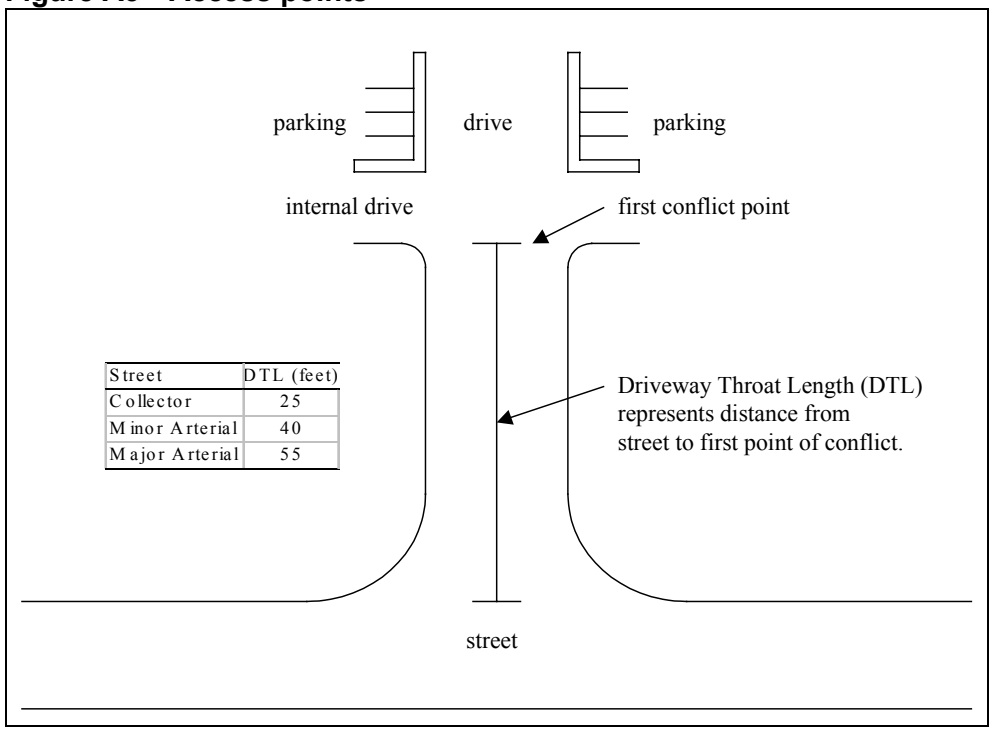

Street	DTL (feet)
Collector	25
Minor Arterial	40
Major Arterial	55

(j) For the benefit of traffic safety and flow on collector and arterial streets, tapered or channelized deceleration lanes for vehicles turning right into high volume or intersection type driveways may be required if warranted. Design of right-turn deceleration lanes shall be in accordance with the AASHTO Green Book on auxiliary lanes.

(i) The spacing requirements for driveways not meeting the specifications in Tables A2 and A3 may be lessened or waived if tapered or channelized deceleration lanes are used.

(k) Access points on arterial and collector streets may be required to be signalized in order to provide safe and efficient traffic flow. A development may be responsible for all or part of any right-of-way, design, hardware, and construction costs of a traffic signal if it is determined that the signal is necessitated by the traffic generated from

the development. The procedures for signal installation and the percent of financial participation required of the development in the installation of the signal shall be in accordance with criteria set forth in the city's traffic signal policy

(7) Street Structures

No driveway shall interfere with municipal facilities such as street light or traffic signal poles, signs, fire hydrants, cross walks, bus loading zones, utility poles, fire alarm supports, drainage structures, or other necessary street structures. The city engineer is authorized to order and effect the removal or reconstruction of any driveway which is constructed in conflict with street structures. The cost of reconstructing or relocating such driveways shall be at the expense of the abutting property owner.

(8) Permits

(a) Any plans submitted for building approval which include or involve driveways shall be referred to the city engineer for approval before a building permit is issued.

(b) A written driveway permit for a new development shall be not issued or required. Approval of driveway location and design for new properties and other developments on a building plan or site plan shall be considered the permit for driveway installation.

(c) Any property owner desiring a new driveway or an improvement to an existing driveway at an existing residential or other property shall make application for a driveway permit, in writing, and designating the contractor who will do the work, to the city engineer or the building supervisor, accompanied by a sketch or drawing showing clearly the driveway, parking area, or doorway to be connected and the location of the nearest existing driveways on the same and opposite sides of the roadway. The city engineer will prescribe the construction procedure to be followed.

(d) A permit or building/site plan approval as per the procedure of either 8(b) or 8(c) shall be required for the location of all driveways which provide for access to property. Driveway permits will also be required for any significant structure change, land use change, or property boundary change.

(e) The driveway permit fee shall be set by resolution of the city council as deemed appropriate by the council and shall be of an amount to cover the cost of licensing and maintaining records.

(f) All permits granted for the use of public property under the terms of this section shall be revocable at the will of the city council.

Appendix B: Example Access Management Ordinance for a County

Summary

The following example access management ordinance has been adapted from the actual county ordinance of Washington County, Oregon. Washington County's ordinance was determined to be one of the most comprehensive ordinances developed by a county for access management. The adapted code is provided to assist Iowa counties in developing access management ordinances. It contains code pertaining to several primary components of access management, including classification of roadways by function and requirements for driveway spacing, corner clearance and sight distance. Key components are summarized as follows:

Roadways are classified according to the following categories:

1. Local Roads -- Provide direct property access; do not serve through traffic.
2. Minor Collectors -- Provide access to abutting properties and serve local access needs of neighborhoods and limited through traffic.
3. Major Collectors -- Serve traffic traveling from Local Roads or Minor Collectors to Arterials; are public thoroughfares with a lesser degree of traffic than Arterials.
4. Minor Arterials -- Serve as primary routes for travel within and between community sub-areas and augment the Major Arterial system; accessed primarily from the Collector system.
5. Major Arterials -- Serve as primary routes for travel between areas of principal traffic generation and major urban activity centers, and for trips between non-adjacent areas.
6. Regional Arterials -- Freeways and principal routes that move traffic and do not provide direct access to land use activities.

Land access is permitted based on driveway spacing and comer clearance requirements as shown in Table A4.

Table A4—Driveway spacing and corner clearance requirements

Roadway Category	Permitted Access	Driveway Spacing	Corner Clearance(1)
Local	all properties	No standards	10 feet
minor collector	all residential, commercial & industrial uses, greater than or equal to 70 feet frontage(2)	No standards	50 feet
major collector	All commercial, industrial, and institutional uses, greater than 150 feet frontage(3)	100 feet	100 feet
minor collector	Collector roads and private direct access	600 feet	600 feet
major arterial	Collectors, minor arterials, and private direct access	1,000 feet	1,000 feet
principal/regional arterial	Limited access subject to Iowa DOT policy	(These roads fall under Iowa DOT jurisdiction)	

(1) Access near an intersection shall be located beyond the influence of standing queues; this requirement may result in a greater corner clearance than the minimum distance indicated.
(2) Uses with less than 70 feet of frontage shall not be permitted a permanent single or separate access; common (joint) access shall be used where available.
(3) Uses with less than 150 feet of frontage shall not be permitted a permanent single or separate access; common (joint) access shall be used where available.

Minimum intersection sight distance shall be ten times the vehicular speed of the road (that is, 350 feet at 35 miles per hour, 400 feet at 40 miles per hour). The vehicular speed for sight distance determination shall be the greater of the design speed or the posted speed, unless the county determines that the 85th percentile speed is less.

Example Access Management Ordinance for a County

All developments shall have legal access to a county or public road. Access onto any county road in the unincorporated or incorporated urban area shall be permitted only upon issuance of an access permit upon demonstration of compliance with the provisions of the county road standards.

A. Roadway Access

In Figure A6, R/W = Right-of-Way, and P.I. = Point-of-Intersection where P.I. shall be located based upon a 90 degree angle of intersection between ultimate right-of-way lines.

(1) Minimum right-of-way radius at Intersections shall conform to the county road standards.

(2) All minimum distances stated in the following sections shall be governed by sight distance requirements according to county road standards.

(3) All minimum distances stated in the following sections shall be measured to the nearest easement line of the access or edge of travel lane of the access on both sides of the road.

(4) All minimum distances between accesses shall be measured from existing or approved accesses on both sides of the road.

(5) Minimum spacing between driveways shall be measured from Point "C" to Point "C" as shown in Figure A6.

Figure A6—Minimum spacing between driveways

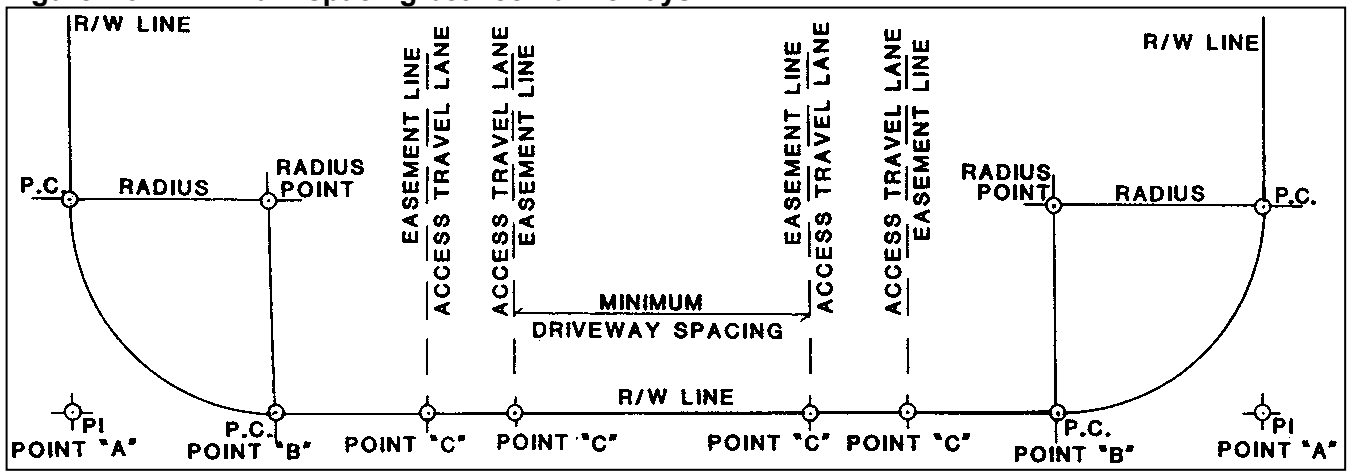

B. Roadway Access

No use will be permitted to have direct access to a road except as specified below. Access spacing shall be measured from existing or approved accesses on either side of the road.

(1) Local Roads

Minimum right-of-way radius is fifteen (15) feet. Access will not be permitted within ten (10) feet of Point "B," if no radius exists, access will not be permitted within twenty-five (25) feet of Point "A." Access points near an intersection with a major collector or arterial shall be located beyond the influence of standing queues of the intersection in accordance with AASHTO standards. This requirement may result in an access spacing greater than ten (10) feet.

(2) Minor Collectors

All residential, commercial and industrial uses with seventy (70) feet or more of frontage will be permitted direct access to a minor collector. Uses with less than seventy (70) feet of frontage shall not be permitted a permanent single or separate direct access to a minor collector. Where a common access is available it shall be used, provided that such use will not result in serious operational or safety problems.

No use will be permitted direct access to a minor collector within fifty (50) feet of Point "A"; or future "P.I." as designated in the Transportation Plan. In the case of a private minor collector which is entirely within a development, double aisle parking areas will be permitted direct access to that collector. Minimum spacing between driveways (Point "C" to Point "C") shall be fifty (50) feet with the exception of single family residential lots in a recorded subdivision. Such lots shall not be subject to a minimum spacing requirement between driveways (Point "C" to Point "C"). In all instances, access points near an intersection with a major collector or arterial shall be located beyond the influence of standing queues of the intersection in accordance with AASHTO standards. This requirement may result in an access spacing greater than fifty (50) feet.

(3) Major Collectors

All commercial, industrial and institutional uses with one-hundred-fifty (150) feet or more of frontage will be permitted direct access to a major collector. Uses with less than one-hundred-fifty (150) feet of frontage shall not be permitted direct access to major collectors. Where a common access is available it shall be used, provided that such use will not result in serious operational or safety problems. No use will be permitted direct access to a major collector within one-hundred (100) feet of any present Point "A"; or future "P.I." as designated in the Transportation Plan. In the case of a private major collector which is entirely within a single development and which provides

circulation only within that development, double aisle parking areas will be permitted access to that collector. Minimum spacing between driveways (Point "C" to Point "C") shall be one-hundred (100) feet. In all instances, access points near an intersection with a major collector or arterial shall be located beyond the influence of standing queues of the intersection in accordance with AASHTO standards. Additionally, access shall be located to provide adequate left-turn refuge. This requirement may result in an access spacing greater than one hundred (100) feet.

(4) Arterials

Direct access to arterial roads shall be from collector or other arterial roads. Exceptions for local roads and private accesses may be allowed when collector access is found to be unavailable and impracticable by the county. Access to arterials shall comply with the following standards:

(a) Minor Arterials

Direct access to a minor arterial will be permitted provided that Point "A" of such access is more than six hundred (600) feet from any intersection (Point "A") or other access to that minor arterial (Point "C").

(b) Major Arterials

Direct access to a major arterial will be permitted provided that such access is more than one thousand (1,000) feet from any intersection (Point "A") or other access to that arterial (Point "C").

(c) Principal/Regional Arterials

Principal/Regional Arterials shall be designed and developed as limited access facilities. Access to a principal or regional arterial is subject to approval by the Iowa DOT through the state's access management policy and its implementing measures.

C. Exception to Access Criteria

(1) Alternate points of access may be allowed if an access management plan which maintains the classified function and integrity of the applicable facility is reviewed and approved after considering the applicant's compliance with this Article.

(2) An application for an access management plan shall explain the need for the modification and demonstrate that the modification maintains the classified function and integrity of the facility. References to standards or publications used to prepare the access management application shall be included with the application.

(3) An access management plan shall address the safety and operational problems which would be encountered should a modification to the access spacing standards be granted. An access management plan shall be prepared and certified by a traffic or civil engineer registered in the State of Iowa. An access management plan shall at minimum contain the following:

(a) The minimum study area shall include the length of the site's frontage plus the distance of the applicable access spacing standard, as set forth in Section B, measured from the property lines or access point(s), whichever is greater. For example, a property with 500 feet of frontage on a minor arterial (required 600 foot access spacing standard) shall have a minimum study area which is 1,700 feet in length.

(b) The access management plan shall address the potential safety and operational problems associated with the proposed access point. The access management plan shall review both existing and future access for all properties within the study area as defined above.

(c) The access management plan shall include a comparison of all alternatives examined. At a minimum, the access management plan shall evaluate the proposed modification to the access spacing standard and the impacts of a plan utilizing the county standard for access spacing. Specifically, the access management plan shall identify any impacts on the operations and/or safety of the various alternatives.

(d) The access management plan shall include a list of improvements and recommendations necessary to implement the proposed access modification, specifically addressing all safety and operational concerns identified.

(4) Notice for a proposed access management plan shall include all property owners within the study area defined in this section.

D. Sight Distance

The following specifies the minimum requirements for sight distance for roads intersecting each other and for driveways intersecting public roads. It is the intent of this section to regulate the creation of new access points and new lots or parcels and development in the county in a manner that will insure that each new access point or each new lot or parcel created or development will have a safe access to a public road.

(1) Existing access points which do not meet the sight distance standards and are on property included with a development action which will not add any additional vehicle trips to that access are exempt from this Section, except as required by county road standards. Improvements at these existing access points may be required to maximize sight distance to the extent practicable by the county through an access permit or right-of-way permit.

(2) The minimum intersection sight distance shall be based on the vehicular speeds of the road. The vehicular speeds for the purpose of determining intersectional sight distance shall be the greater of the following unless the eighty-five percentile speed is determined to be less by the county pursuant to the standards of this Section.

(a) Design Speed - A speed selected by a registered engineer for purposes of design and correlation of those features of a road, such as curvature, superelevation, and sight distance, upon which the safe operation of vehicles is dependent.

(b) Posted Speed - That speed which has been established and posted by the county.

(c) Eighty-five Percentile Speed - That speed as certified by a registered engineer below which 85 percent of all traffic units travel, and above which 15 percent travel. The eighty-fifth percentile speed shall be measured at the point where the sight restriction occurs.

(3) Intersection sight distance shall

(a) Be based on an eye height of 3.5 feet and an object height of 4.25 feet above the road; and

(b) Be assumed to be 10 feet from the near edge of pavement or the extended curb line or the near edge of the graveled surface of a gravel road to the front of a stopped vehicle.

(4) Minimum intersection sight distance shall be equal to ten (10) times the vehicular speed of the road as determined by the standards of this Section such as in Table A5.

Table A5—Intersection sight distance

MPH	Distance along Crossroad (ft)
25	250
30	300
35	350
40	400
45	450
50	500
55	550

(5) Intersection sight distance values shall conform with (3) above. For significant road improvement projects, the above intersectional standards shall be met in addition to the AASHTO remaining sight distance standards.

(6) In those instances where there are no access locations available to the site that meet or can meet the sight distance requirements, a written request for modification may be submitted to the county. The request for modification shall be specifically stated in the notice for the accompanying development permit and shall be considered as part of said development permit. The request for modification of the sight distance requirements shall be subject to the following:

(a) Submitted and certified by a registered engineer;

(b) Documented and reference nationally accepted specifications or standards;

(c) Certified that the modification will not compromise safety or the intent of the county's transportation standards;

(d) The cost of any modifications agreed to must be borne by the applicant; and

(e) There shall be no location available to provide access to the proposed development site which currently meets the sight distance requirements, or which can be altered to meet the sight distance requirements. Alterations needed to provide adequate sight distance include but are not limited to grading and the removal of vegetation. For the purpose of this subsection alternative access location means:

1. Any location on the proposed development site which meets or can meet the sight distance requirements; or

2. Any location off the proposed development site which:

(i) Can provide access to the site by an existing access easement or through an access easement which will be provided to the site as part of the development application; and

(ii) Meets or can meet the sight distance requirements.

E. Road Standards

(1) All roads proposed to be of public ownership shall conform to the county road standards.

(2) All proposed curve radii shall be designed to county road standards for truck-turning requirements.

Model Access Management Ordinance

DRAFT
June, 1998

Acknowledgments

This Model Access Management Ordinance was made possible, in part, by a grant award from the New York Planning Federation to the towns of Canandaigua and Farmington, under the Rural New York Grant Program. It evolved from access management ordinances that were developed by and for the Towns of Canandaigua and Farmington, through a cooperative "team" process involving local planning and economic development officials and staff from the New York State Department of Transportation's offices in Rochester (Region 4) and Albany --as part of the Department's Rt. 332 corridor improvement project and Arterial Access Management initiative.

Realistically, this Ordinance is the product of many contributors and we'd particularly like to thank Pat Reece, Chair of the Town Planning Board in Canandaigua, Dick Twardokus and Rick Burgwardt of the NYSDOT design team, Steve Ferranti of SRF & Associates, Don Nims of Clark Patterson Associates, Greg Barbour of the MRB Group, and Brad Oswald and Lynne Webb of the NYSDOT Corridor Management Group for their insight into and many comments on the evolving Model. We would also like to thank Harry Willis of the New York State Department of State, Diane Carlton of the Otsego County Planning Department and Steve Somlo of the New York State Department of Transportation's Office of Legal Affairs for their review and thoughtful critiques. It has also benefited from questions and comments received during reviews of early drafts at the Genesee Transportation Council's Access Management Seminar, the 1997 New York State Association of Towns' annual meeting, and the 1997 New York Planning Federation's Annual Institute.

Although many individuals obviously helped shape this Model its final form reflects our determination as to the better path to follow given differing views and objectives. Even reasonable people can disagree ... so the Model must be evaluated carefully and adapted to the objectives and characteristics of each community. If there are questions regarding how this might be accomplished, or comments as to how the Model might be refined, please don't hesitate to contact us.

Steve Munson
New York State Department of Transportation
Mobility Management Section
(518) 457-3429

Ron Brand,
Director of Development
Town of Farmington
(315) 986-8189

Aaron Gagne
Deputy Director of Economic Development, Livingston County
(716) 243-7126

Ken Carlson
New York State Department of Transportation
Corridor Management Group
(518) 457-3429

Table of Contents

Introduction 1

Model Access Management Ordinance 3

Section I. Purpose 3

Section II. Applicability 3

Section III. Conformance 4

Section IV. Definitions 4

Section V. Standards and Requirements 5
- A. Access Requirements 6
  - 1. General 6
  - 2. Driveway Spacing Standards 6
    - Table 1: Minimum Driveway Spacing Standards 7
    - Table 2: Comparison of Driveway Spacing Recommendations 8
  - 3. Corner Clearance 9
    - Table 3: Minimum Corner Clearance Requirements 9
  - 4. Driveway Location 10
  - 5. Driveway Design 11
    - Table 4: Suggested Access Connection Design 12
    - Table 5: Generally Adequate Connections Depths for Major Facilities 12
  - 6. Driveway Movements 12
  - 7. Interconnection of Parking Areas 13
- B. Intersection Spacing 13
  - Table 6: Minimum Intersection Spacing Standards 13
  - Table 7: Maximum Intersection Spacing Standards 14
- C. Medians and Median Openings 14
  - Table 8: Minimum Median Opening Spacing Standards 14
- D. Large Developments 15
- E. Subdivisions 15
- F. Changes in Access 16
  - 1. Conditional Requirements 16
  - 2. Non-Conforming Access 18
- G. Incentives 19
- H. Variance Standards 19

Introduction

A high quality road system is one of a handful of major assets which determine the vitality and character of a municipality. And, as with other assets, planning, management and protection are necessary to ensure that this system is used to its best overall local advantage. Many local governments have, however, generally ceded these responsibilities to the State; particularly for the most heavily used and developed roads --intervening only when traffic problems generate substantial popular pressure for resolution or when the State proposes a project. Yet it is clear that local land-use planning, management and control can significantly reduce the transportation problems resulting from development, while promoting growth that is consistent with overall municipal objectives.

The Model Access Management Ordinance provided in this report is based on the premise that "local land-use management can better balance full development and the safe and efficient movement of traffic". It addresses those elements of development which are primarily culpable in the deterioration of local transportation systems. In determining how to apply this Model six general characteristics should be recognized.

First, it is planning oriented. It generally encourages and authorizes a Planning Board to require a number of actions by developers. The net result of this is to increase pressure to plan and evaluate development proposals on an integrated rather than single-site basis.

Second, it is neither proscriptive nor detailed. Specifications for many of the elements addressed in this Model vary significantly depending on the functions of the roadways it covers, the specific type of development proposed and the characteristics, needs and objectives of a community. In such cases the Model generally establishes a "goal" and defines how it is to be achieved.

Third, it is oriented towards environments which are lightly to moderately development. It can be applied in heavily developed areas but must be adapted to the specific circumstances -- particularly as regards spacing standards and methods of implementation.

Fourth, it is generally organized to be consistent with the structure of local zoning, subdivision and site-plan approval codes.

Fifth, it addresses the basic elements of access management. Other elements which are frequently included in local zoning, subdivision, and site-plan approval ordinances should be reviewed to ensure consistency with the Model Ordinance, these include:

frontage requirements --must allow the location of driveways within the minimum driveway spacing standards, else the minimum standards may not be enforceable.

setback requirements -- reasonable setbacks provide for the development of pedestrian and transit facilities as well as potential widening of the road.

lot depths requirements -- consistent lot depths in commercial areas provide an opportunity to develop rear service or access roads. These can be important in providing access between retail or commercial facilities as full build-out occurs.
buffer requirements -- many local ordinances require the construction of "impenetrable" buffer areas between retail and commercial facilities. These need to be reviewed and, if

necessary, revised to reflect the cross-access driveway and inter-connected parking requirements of the Model Ordinance.

sign and lighting standards -- Lighting and signs are necessary to provide drivers with advance warning of businesses and a clear view of how they are to enter, exit or move between parking areas. Inadequate sign regulations can create visual clutter that is both unattractive and distracting --creating unsafe driving conditions.

Finally, it is an extension of the matters addressed by municipal zoning and, thus, can be adapted and applied to its greatest effect only in communities which have zoning.

It should also be noted that in many areas access management plans have included elements that are specifically intended to enhance the aesthetic development of commercial areas, and specifically pedestrian facilities (sidewalks, rest areas, seating, and the like), landscaping and architectural standards.

This is a only a model and it must be adapted to meet the needs and objectives of a community. Regardless of the specific application (e.g. community-wide or within an overlay zone) or process followed, a detailed review of existing zoning, subdivision, and site-plan approval ordinances must be conducted. This review has 3 general objectives: (i) to assist in determining the best method of implementation; (ii) to eliminate conflicts and ensure conformity between the language and requirements of the Model and those contained in existing ordinances; and (iii) to eliminate redundancy --and thereby reduce complexity and the effort and costs potentially associated with adaptation.

Finally, additional information and discussion of a number of issues that might be used to expand or adapt the Model Ordinance are provided, *in italicized print*, in the appropriate sections.

Model Access Management Ordinance

Local Law Number XX of 199X
TOWN OF XX Access Management Law

Section I. Purpose

The purpose of this Ordinance is to provide for safe and efficient travel along public roads, prevent the adverse social and aesthetic impacts associated with strip road frontage development, and promote development which harmonizes with the objectives of the TOWN OF XX by providing clear and consistent access management standards to the development of properties abutting public roads.

(*Cite the section of State Law providing implementation authorization*.)

Section II. Applicability

This Ordinance shall apply to all properties abutting public roads or with direct access or common connections to public roads within the boundaries of the INSERT SPECIAL DISTRICT NAME created by LOCAL LAW OR RESOLUTION --TITLE, NUMBER AND DATE.

A variety of approaches might be used to implement or adapt this Model Ordinance. Ideally, access management requirements would flow from a Comprehensive Plan which addresses transportation needs and land-use planning and management on a broad basis. In practice, however, the majority of municipalities addressing access management have focused on specific corridors and/or discrete areas and the imposition of zoning, subdivision and site-plan requirements within an overlay zone, as was the case in the draft ordinance prepared for the Town of Farmington. This is anticipated to be the most common approach and so the Model has followed it. Nonetheless, it has drawbacks, specifically in that it can create undesirable pressure outside of the overlay zone and fails to address overall transportation needs and objectives --which are best considered at a "systems" level.

An alternative approach is to incorporate access management within existing zoning, subdivision and site-plan approval requirements, as was done for the draft code prepared for the Town of Canandaigua. In this case, specific elements from this Model were rolled into the zoning provisions for retail, commercial and industrial districts; the subdivision requirements were placed into the subdivision chapter and applied to all non-minor subdivisions; and, general access requirements were incorporated within existing subsections of the zoning code which addressed related issues including parking requirements, street layout and the like.

Other types of application are also possible. The Town of Penfield, for example, has applied access management on a property-by-property basis within a relatively small overlay zone. Alternatively, it appears that the Town of Pittsford will incorporate access management as "design guidelines" applicable to the short commercial stretch of Monroe Ave.

Section III. Conformance

The location and design of driveways and other site layout, parking and access management conditions shall conform to all Federal, State and local requirements, including and not limited to those established in this Ordinance. Further, the requirements of this Ordinance are not to be substituted for the zoning, subdivision and site plan approval provisions provided in CHAPTERS XX, XX AND XX OF THE TOWN OF XX but are to be superimposed over such provisions and should be considered as additional requirements.

Section IV. Definitions

> *The definitions contained in this Model Ordinance do not include those that are generally already included in Municipal codes. They must be compared with the definitions within municipal codes and any differences need to be reconciled.*

Access - A way or means of approach to provide vehicular or pedestrian entrance or exit to a property.

Access Connection - Any driveway, street, turnout or other means of providing for the movement of vehicles to or from the public road system or between abutting sites.

Access Management - The process of providing and managing reasonable access to land development while preserving the flow of traffic in terms of safety, capacity, and speed.

Corner Clearance - The distance from an intersection of a public or private road to the nearest access connection, measured from the closest edge of the driveway pavement to the closest edge of the road pavement.

Cross Access - A service road or driveway providing vehicular access between two or more contiguous sites so the driver need not enter the public road system.

Driveway - Any entrance or exit used by vehicular traffic to or from land or buildings abutting a road.

Driveway, Shared - A driveway connecting two or more contiguous properties to the public road system.

Functional Area (Intersection) - The area beyond the physical intersection of two roads that comprises decision and maneuver distance plus any required vehicle storage length.

Functional Classification - A system used to group public roads into classes according to their purpose in moving vehicles and providing access to abutting properties.

Nonconforming Access - Features of the access system of a property that existed prior to the effective date of this Ordinance and that do not conform with the requirements of this Ordinance.

Peak Hour Trips (PHT) - A weighted average vehicle trip generation rate during the hour of highest volume of traffic entering and exiting the site in the morning (a.m.) or the afternoon (p.m.).

Reasonable Access: The minimum number of access connections, direct or indirect, necessary to provide safe access to and from a public road, as consistent with the purpose and intent of this Ordinance and any other applicable plans and policies of the TOWN.

Restrictive Medians - A physical barrier in the roadway that separates traffic traveling in the opposite directions, such as a concrete barrier or landscaped island.

Road - A way for vehicular traffic, whether designated as a “street”, “highway”, “thoroughfare”, “parkway”, “through-way”, “avenue”, “boulevard”, “lane”, “cul-de-sac”, “place”, or otherwise designated, and includes the entire area within the right-of-way.

Road, Arterial - Roads serving comparatively large volumes of high speed (45 miles per hour or greater), long-distance or through traffic and which also provide access to abutting properties.

Road, Collector - Roads which provide access to abutting properties and which link development roads, collector roads, or other local roads to major traffic roads.

Roads, Development - Roads which are specifically constructed or intended to provide access to abutting properties for residential purposes or other high density uses as determined by the underlying zoning.

Road, Service (also Access Road) - A public or private road, auxiliary to and normally located parallel to a controlled access facility, that maintains local road continuity and provides access to properties adjacent to the controlled access facility.

Temporary Access - Provision of direct access to a road until that time when adjacent properties develop, in accordance with a joint access agreement or frontage road plan.

Section V. Standards and Requirements

One of the most important objectives of access management is reducing conflicts, particularly along the most heavily traveled roadways. The best methods of achieving a reduction in conflicts is by reducing the number of conflict points and separating through from local traffic. The State accomplishes this by purchasing access rights along higher functional class facilities (e.g. the interstate highways).

Municipal governments can bring land-use development and transportation into balance, and also reduce conflict points, through appropriate limitations to the number of driveways to individual properties and driveway spacing requirements. Conflicts can be further reduced along the most heavily traveled roads by ensuring that access is provided to the lowest functional class road serving the proposed development as well as establishing provisions for vehicles to move between parking areas to access abutting properties --rather than along the road.

A. Access Requirements

1. General

a. The site layout, location and design of driveways, parking, and other access management requirements should be based on full permissible development of a property.

b. Driveways should be limited to one per property. More than one driveway may be permitted if:

i. the additional driveway(s) does not degrade traffic operations and safety on State or local roads; and

ii. the additional driveway(s) will improve the safe and efficient movement of traffic between the property and the road.

c. Driveways to properties with frontage on two or more roads shall be provided to the road with the lowest functional classification serving the proposed use of the property.

d. Properties with frontage on two or more roads do not have the right to driveways to all roads.

e. Driveways may be required to be located so as to provide shared driveways and/or cross access driveways with an abutting property or properties.

i. Shared driveways and/or cross access driveways shall be of sufficient width (minimum 20 feet, 6.0 meters) to accommodate two way travel for automobiles and service and loading vehicles. Wider driveways may be required to serve traffic to major generators and/or large vehicles.

ii. Shared driveways, cross access driveways, interconnected parking, and private roads constructed to provide access to properties internal to a subdivision shall be recorded as an easement and shall constitute a covenant running with the land. Operating and maintenance agreements for these facilities shall be recorded with the deed.

2. Driveway Spacing Standards

a. Driveway spacing standards shall apply to driveways located on the same side of a road.

b. Driveway spacing is to be measured along the road from the closest edge or curbline of the driveway pavement to the closest edge or curbline of the next driveway.

c. Driveways shall be located so as to meet or exceed the driveway spacing standards shown in Table 1.

Table 1: Minimum Driveway Spacing Standards

	Development Size in Peak Hour Trips, PHT		
Road Classification	Small 0-150 PHT	Moderate 151-300 PHT	Large ≥300 PHT
Arterial	330 feet	440 feet	550 feet
Collector	220 feet	330 feet	440 feet
Access or Development	60 percent of the minimum frontage requirement		

i. PHT, Peak Hour Trips, will be determined through application of the most current Institute of Transportation Engineers Trip Generation methods and statistics. In general, the determination of Peak Hour Trips is obtained by multiplying the average vehicle trip end rate for the proposed development during the p.m. peak hour of the proposed development or the p.m. peak hour of adjacent road traffic, whichever is greater, times the appropriate multiplier for the development as determined by the type and scale of development. Another methodology or other statistics for determination of Peak Hour Trips may be used with permission from the TOWN Planning Board,.

ii. PHT, Peak Hour Trips, should be based on full build-out of the property.

iii. The larger of the minimum driveway spacing standards for the proposed development or for existing developments at abutting properties will apply. Driveways for in-fill development must meet the driveway spacing standards to abutting properties on both sides.

Driving spacing is one of the fundamental elements of access management. There are four factors which determine generally appropriate driveway spacing: the functional class of the road, traffic speed and volume, and trip generation by the proposed development. Application of all four factors results in a highly complex system of driveway spacing and most states have based driveway spacing standards on speed or a simple combination of speed and functional class (the latter include Florida and Oregon), as shown in Table 2.

Although the standards provided in other states may be simpler to apply than the standards proposed in this Ordinance they do not discriminate between small and large traffic generators and, thus, may penalize small developers or shift land-use "demand" away from areas that are targeted for development. Speed is, nonetheless, a principal determinant of driveway spacing and the standards provided elsewhere are alternatives to the system provided in this Model. Those used in Colorado and Iowa are based on stopping sight distance and provide a particularly good alternative.

Table 2: Comparison of Driveway Spacing Recommendations

Summary of Access Spacing for Various Technical Criteria, in feet (1)

Criteria /// Speed (MPH)	30	35	40	45	50
Stopping Sight Distance	200	250	325	400	475
Sight Distance, Turning	375		460	575	700
Sight Distance, Crossing	290	340	390	440	480
Min. Right Turn Conflict Overlap	100	150	200	300	400
Maximize Egress Capacity	320	450	620	860	1,125

Existing, Proposed or Recommended Driveway Spacing Standards (feet)

State /// Speed (MPH)	30	35	40	45	50
New Jersey	125	150	185	230	275
South Carolina	100	150	200	250	300
Colorado	200	250	325	400	475
Iowa	200	250	325	400	475
Florida	245	245	440	440	660
Oregon	Regional Facilities: Urban 300, Rural 500 District Facilities: Urban 150, Rural 300				

Source: "Driveway and Intersection Spacing" Transportation Research Board Circular #456, March 1996, TRB/NRC.

In order to accommodate safe and efficient movement of traffic in balance with the rights of developers this Model Ordinance proposes minimum spacing standards based on the functional class of the road and the size of a proposed development in terms of peak hour trip generation. Larger minimum spacings are provided for higher functional class roads --which have been constructed principally to serve through traffic and are intended to function at higher speeds. Larger spacings are, similarly, required for larger developments --and these are likely to be capable of absorbing large frontage requirements. Conversely, lower minimums have been proposed for lower functional class roads --which are designed principally to accommodate development and often function at lower speeds. Similarly, smaller standards have been set for smaller developments, which are often incapable of absorbing the cost of large frontages. (At the same time, developments which require a small lot but generate a large volume of traffic may be accommodated by combined development or through shared driveways or cross access systems.) To make this type of structure work planners must:

* *ensure that the spacings can be accommodated within existing or proposed frontage requirements along each functional class of road, and*

* *require developers to evaluate how their driveway location will affect opportunities to develop upstream and downstream properties.*

Desirably, minimum frontage requirements (established only through zoning) would meet or exceed the lowest minimum driveway spacing requirement, else in areas that are fully developed the minimum spacing standard might well be unenforceable. In practice, properties in areas that are lightly developed or undeveloped generally have relatively large frontages and are capable of meeting minimum spacing requirements; or, as required in Section V. E., must have an access plan that meets the requirements of the Model Ordinance before a subdivision is approved.

The driveway spacing standards proposed in the Ordinance may be difficult to apply in areas that are heavily developed as lot frontage and existing driveway spacing are generally less than the standards proposed in this Model. Where the spacing of existing driveways is below the proposed minimums, two general approaches are possible:

* *spacing standards can be maintained at relatively high levels and requirements for retrofit can be applied to developed properties,*

* *standards can be based on obtaining the maximum available spacing between existing driveways at developed properties and new driveways at infill properties.*

As a general rule, however, redevelopment provides the best opportunity to improve access management, generally, in highly developed areas. Those localities addressing access management in highly developed areas generally establish a plan which identifies desirable access improvements, and then links implementation of the plan to specific permit actions --such as may be required for redevelopment or a change or upgrade of use at a site.

3. Corner Clearance

   a. Corner clearance is to be measured along the road from the closest edge or curbline of the driveway pavement to the closest edge or curbline of the road pavement.

      Where road widening is planned or anticipated corner clearance should be increased to provide for the width of the additional lane or lanes.

   b. Driveways for corner properties shall meet or exceed the minimum corner clearance requirements, as specified in Table 3:

Corner properties present special problems because they are extremely attractive to high volume peak-hour traffic businesses (e.g. gas stations, mini-marts and fast food franchises) whose designs often create conflict areas that overlap with the conflict area of the intersection. The standards proposed in the Model Ordinance are consistent with those enacted in other states. In practice, however, traffic safety alone would dictate larger spacing. In evaluating site development plans for corner properties Planners should be guided by the following principles:

* *driveways should be located outside the functional area of the intersection or, if this is not possible, driveways should be placed as far as possible from the intersection.*

Table 3: Minimum Corner Clearance Requirements

Type of Driveway, and driveway movements	Partial access: right turns in and/or out only	Full access: all directional movements
Minimum Clearance	110 feet	220 feet

* *driveways which allow left turns in and out should not be allowed where left-turn vehicles must cross three or more lanes or two lanes and a center-left-turn-lane.*

* *cross access should be available to abutting properties.*

4. Driveway Location

   a. Driveway location will be based on a site plan which has been approved by the TOWN Planning Board in consultation with the TOWN Engineer and/or the TOWN Highway Superintendent.

   b. For the purpose of driveway locations, median openings shall be treated as intersections and driveways to properties opposing a median opening shall be located so as to exceed the minimum corner clearance standards. This requirement shall be waived where the median opening is specifically constructed or reconstructed to provide vehicular access to such properties.

   c. Driveways shall be located so as to meet or exceed the minimum driveway spacing standards and the minimum corner clearance standards.

   d. The TOWN Planning Board may allow the location of driveways at less than the minimum driveway spacing standards or corner clearance standards, if:

      i. a dual-driveway system, cross-access driveway system or shared driveway is proposed and this improves the safe and efficient movement of traffic between the property and the road; or,

      ii. a driveway or driveways could be located so as to meet the minimum driveway spacing standards and corner clearance standards, but the characteristics of the property or the physical or operational characteristics of the road are such that a change of location will improve the safe and efficient movement of traffic between the property and the road; or,

      iii. conformance with the driveway spacing standards or corner clearance standards imposes undue and exceptional hardship on the property owner.

The safe and efficient movement of traffic along a road and between the road and a development are the dominant considerations in driveway location. Minimum driveway spacing standards are designed to achieve a <u>general</u> reduction in the number and density of driveways along a road. In practice, however, the location of a driveway or driveways at a specific site is affected by many other factors, and these may dictate locations which are less than or exceed the proposed minimum spacing. These might include factors that make it undesirable to place a driveway so as to meet the spacing standards, including sight distance, road grade and geometry, and environmental or historical amenities. They might also include alternative access designs which contribute to the safe and

efficient movement of traffic above and beyond what might be achieved by spacing alone, including development of a dual-drive system or locating a driveway so as to enable the interconnection of abutting or rear properties.

e. For properties unable to meet the minimum driveway spacing standards or corner clearance standards, a temporary driveway may be granted.

The granting of a temporary driveway would normally be conditioned on obtaining access to a planned access road or through a shared driveway, cross-access driveway or unified circulation system with an abutting property, in the future. Specific conditions for closure of the temporary driveway should be attached to the site plan approval, including a target date.

f. For properties unable to meet the minimum corner clearance requirements, driveways shall be located as far as practicable from the intersection. In such cases, driveway movements may be restricted and only one driveway will be permitted along the road frontage not meeting the minimum corner clearance requirement.

5. 5. Driveway Design

a Driveways shall be designed so as to provide for the safe and efficient movement of traffic between the roadway and the site, and to eliminate the potential for the queuing of vehicles along the roadway due to congestion in or at the driveway.

b. Vehicle circulation systems on the site shall be designed so as to provide for the safe and efficient movement of traffic between the driveway and the site.

c. Driveway width, radii, flare, throat length, internal circulation systems, and other design elements for driveways to developments generating more than 150 peak hour trips shall be based upon traffic, engineering and design data provided by a traffic engineer/consultant who is recognized and accepted by the TOWN Planning Board. In the event that a traffic engineer/consultant is not provided the TOWN shall have the right to retain such traffic engineer/consultant at the cost of the applicant.

Inadequate driveway design is commonly implicated in traffic safety problems, often manifested by the development of queues along the road behind a driveway. Appropriate driveway designs vary substantially, however, depending on the scale of development, the volume and type of vehicles using the driveway, site and road conditions, and other factors. The Model Ordinance has opted for a simple approach by providing an objective, defining responsibility, and stating how the appropriate design is to be determined.

More specific approaches are possible. The Florida Department of Transportation Standard Index's design recommendations, for example, shown in Table 4, provide guidelines for driveway width, flare, radii, angle, and divisional islands that can applied to a broad range of situations and are relatively easy to incorporate to an access management ordinance. Virgil Stover has provided similar guidance for connection depths, throat length, as shown in Table 5. (Additional assistance in establishing

appropriate driveway designs can also generally be provided by the County Highway Department and the Traffic and Safety Division of the New York State Department of Transportation.)

Table 4: Suggested Access Connection Design
FLADOT, Standard Index, Roadway and Design Standards, 1992

Trips per Day Trips per Hour	1 - 20 1 - 5		21- 600 6 - 60		601 - 4,000 61 - 400	
	Urban Section	Rural Section	Urban Section	Rural Section	Urban Section	Rural Section
Connection Width (two-way)	12' min 24' max	12' min 24' max	24' min 36' max	24' min 36' max	24' min 36' max	24' min 36' max
Flare (Curb Drop)	10' min	N/A	10' min	N/A	N/A	N/A
Returns (Radius)	N/A	15' min 25' std 50 max	small radii may be used	25' min 50 std 75 max	25' min 50' std 75' max	25' min 50' std 75' max
Angle of Drive			60° - 90°	60° - 90°	60° - 90°	60° - 90°
Divisional Island			4' - 22'	4' - 22'	4' - 22'	4' - 22'

Table 5: Generally Adequate Connections Depths for Major Facilities

Facility Type	Depth (feet)
Regional Shopping Centers (malls)	250
Community Shopping Center	80
Small Strip Shopping Center	30
Regional Office Complex	250
Office Center	80
Smaller Commercial Developments	30

6. Driveway Movements

   a. Driveway movements (cross, left turn in, left turn out, right turn in, and right turn out) may be restricted so as to provide for the safe and efficient movement of traffic between the road and the property.

   b. Each driveway is to be designed and constructed to provide only the allowable movements and physically discourage prohibited movements.

7. Interconnection of Parking Areas

a. Adjacent properties may be required to provide a cross access driveway and pedestrian access to facilitate circulation between sites.

b. Shared parking is encouraged. Shared parking shall be permitted a reduction in required parking spaces if peak parking demand periods at interconnected developments do not occur at the same time.

c. On site vehicular circulation systems shall be designed so as to facilitate use of cross access driveways.

d. Cross access driveways shall be recorded as an easement and shall constitute a covenant running with the land. Operating and maintenance agreements for these facilities shall be recorded with the deed.

B. Intersection Spacing

1. Intersection spacing shall be measured from the centerline of the proposed connecting roadway to the centerline of the next connecting roadway or to the centerline of a signalized driveway, whichever is closest.

2. Minimum intersection spacing standards are established so as to provide for the efficient movement of traffic. Minimum intersection spacing shall be as set out in Table 6:

Table 6: Minimum Intersection Spacing Standards

Road Type	Signalized Intersection	Unsignalized Intersection
Major Traffic Road	2,640 feet	1,320 feet
Collector Road	2,640 feet	1,320 feet
Development Road	1,320 feet	660 feet

Large minimum intersection spacing standards contribute primarily to the efficient flow of traffic and reduce travel time. The minimums proposed in this Model Ordinance also reflects the need to provide safe and expeditious access to properties abutting public roads.

3. Maximum intersection spacing standards are provided to ensure an orderly pattern of land-use development and the creation of a safe and efficient traffic circulation system serving development.

a) The establishment of intersections at locations at less than the maximum spacing standard shall be applied as an element of the site plan review process, or as part of the subdivision approval process, or prior to subdivision or site plan approval on the TOWN/COUNTY official map.

b) Maximum intersection spacing shall be as set out in Table 7:

Table 7: Maximum Intersection Spacing Standards	
Road Type	**Approximate Spacing**
Arterial	5,280 feet
Collector	2,640 feet
Access and Development	1,320 feet

An efficient road network provides for both efficient traffic circulation and development. Ideally, the development of a local road network would evolve from the transportation element of a local Comprehensive Plan: which identifies the location of roads and intersections, the functional purpose of each road to be developed, and the circumstances or phasing under which such roads or intersections would actually be built. All too often, however, residential and commercial development preempts such plans and displaces the logical location of roads and intersections. The results of such displacement can be unfortunate and may include land-locked properties and overly expensive fixes to local traffic circulation and safety problems. Maximum intersection standards can be applied (even in the absence of a local transportation plan) to guide the development of a logical and efficient local road network.

C. Medians and Median Openings

1. The type, location and length of medians on public roads shall be determined by the entity having jurisdiction over such roads. This determination will be made in consultation with the TOWN Planning Board and will be based on existing and projected traffic conditions; the type, size, and extent of development and traffic generated by development; traffic control needs; and other factors.

2. The minimum spacing between median openings shall be as shown in Table 8:

Table 8: Minimum Median Opening Spacing Standards		
Type of Median opening // Posted Speed	Restrictive, does not allow all directional movements	Non-Restrictive, allows all directional movements
Less than 45 MPH	660 feet	1,320 feet
45 MPH or more	1,320 feet	2,640 feet

3. Median openings intended to serve development must meet or exceed the minimum median opening spacing standards and must also be justified by a traffic impact analysis approved by the entity having jurisdiction over such roads, in consultation with the TOWN Planning Board, or the TOWN Planning Board where driveways are proposed to connect to TOWN roads. The cost for preparation of the traffic impact analysis and construction of the median opening or openings, including installation and operation of signals and other improvements where warranted, shall be born by the applicant.

D. Large Developments

1. Large Developments are developments which generate more than 300 Peak Hour Trips. For purposes of this subsection Large Developments shall include residential and mixed

used subdivisions whose combined trip generation from all properties exceeds 150 Peak Hour Trips and such other uses as will, in the opinion of a qualified transportation engineer, detrimentally impact the safe and efficient movement of traffic.

2. Large developments shall be required to mitigate the traffic impacts of their development. Required mitigation may include but is not limited to the construction of signals, turning lanes, medians, combined and shared driveways, and service or access roads as well as implementation of transit improvements and/or traffic demand management strategies.

3. Required mitigation will be established by the TOWN Planning Board through a SEQRA review and/or Transportation Impact Study (TIS) as determined by the TOWN Planning Board.

4. It shall be the developer's responsibility to provide the SEQRA review or Transportation Impact Study, as directed by the Town Planning Board.

5. It shall be the developer's responsibility to provide the required mitigation.

6. Phased mitigation may be allowed where phased development is proposed.

Individual small- to moderate-sized developments seldom generate traffic impacts which warrant immediate mitigation. Over time, however, the cumulative impacts of such developments place tremendous stress on the transportation environment, and often inhibit solutions to relieve this stress. By-and-large, this Model Ordinance addresses cumulative development.

Large developments, however, require specific and individual attention because their traffic demands, alone, may actually exceed the capacity of some road local road systems but often reduce the level of service --even on major roads. The Model Ordinance simply reinforces existing practices in many municipalities by requiring that such developments evaluate and mitigate any impacts that they may cause.

E. Subdivisions

1. Planned access shall be provided for properties which are the result of subdivisions occurring after the effective date of this Ordinance.

2. Planned access shall address the provisions of this Ordinance, other State and Local requirements, and the following:

   i. Properties which are the result of a subdivision do not have the right of individual and exclusive access to State and local roads. The number of driveways or other connections shall be the minimum number necessary to provide reasonable access to these properties, not the maximum available for the frontage.

   ii. Access shall be provided to the road with the lowest functional classification serving the proposed development.

iii. Access should be internalized. Access to properties within a subdivision should be obtained from an access road or interior road.

iv. If the property which is proposed to be subdivided has frontage on two or more roads, internal properties should share access to such roads.

v. The access system for the proposed subdivision should be coordinated with existing, proposed and planned streets outside the subdivision.

3. Shared driveways, cross access driveways, interconnected parking, and private roads constructed to provide access to properties internal to a subdivision shall be recorded as an easement and shall constitute a covenant running with the land. Operating and maintenance agreements for these facilities should be recorded with the deed.

In lightly to moderately developed areas property sizes are likely to be large and, hence, property owners may be attracted to subdivide their properties in order to maximize real estate income. Planned access as a requirement for subdivision approval is one of the best methods of reducing the impacts of subdivision traffic on the local road system while ensuring orderly development. Three general principles should guide the development of subdivision access plans:

* *reduce the number of direct connections to higher functional class roads (perhaps collectors but certainly arterials) by providing internal roads and requiring driveways to these roads;*

* *where potential subdivisions abut 2 or more roads, distribute traffic by requiring connections to all roads and developing a circulation system that provide all properties with reasonable access to such roads; and,*

* *where potential subdivisions abut other undeveloped properties provide easements linking the internal circulation system to the abutting property. This allows for the connection of "future" roads (or parking areas).*

F. Changes in Access

1. Conditional Requirements. For developments taking place after the effective date of this Ordinance:

a. The TOWN Planning Board may establish provisions for and require future alteration of the property layout, the location and design of driveways, parking, and other access features based on phased development, additional development or a change in use of a property, or development of or a change in use at an abutting property.

b. On completion of a side, access or service road abutting a property with a driveway connection to a Major Traffic Road, the TOWN Planning Board may

require a driveway or driveways to the side, access or service road and closure of the driveway connection to the Major Traffic Road.

The TOWN Planning Board may waive this requirement if:

i. the property shares a driveway or dual-driveway system to the Major Traffic Road with an adjacent property or properties; and/or

ii. driveway movements from the driveway to the Major Traffic Road are restricted or the TOWN Planning Board determines that road improvements are warranted and the property owner agrees to construct such improvements.

c. For any change or upgrade of use of a property which requires a TOWN permit or approval and increases Peak Hour Trips, the TOWN Planning Board may:

i. require the closure and relocation or consolidation of driveways so as to meet the minimum driveway spacing standard for the new level of Peak Hour Trips;

ii. require shared driveways and cross-access driveways with abutting properties; and,

iii. impose property-layout and parking requirements which allow for the circulation of traffic between abutting properties.

The Model Ordinance contains requirements that may not be immediately necessary but will be desirable and may be necessary once development approaches full build-out. The short-term costs of such requirements may be difficult to justify in respect to immediate benefits and may actually inhibit development. To get around such problems the Model Ordinance enables local governments to incorporate provisional requirements, generally to the site-plan approval. These changes would then be implemented once certain threshold conditions occur; for example, once traffic volumes reach a certain level, or development occurs at an abutting site, or a rear access or service road is constructed.

2. Non-Conforming Access

a. When a property owner of a property with an existing, non-conforming driveway or driveways, as of the effective date of this Ordinance, applies for a permit to upgrade or change the use of the property, the TOWN Planning Board will determine whether it is necessary and appropriate to retrofit the existing driveway or driveways.

b. The property owner may be required to establish a retrofit plan. The objectives of the retrofit plan will be to minimize the traffic and safety impacts of development by bringing the number, spacing, location, and design of driveways into conformance with the standards and requirements of this Ordinance, to the

extent possible without imposing undue or inequitable hardship on the property owner. The retrofit plan may include:

i. elimination of driveways,

ii. realignment or relocation of driveways,

iii. provision of shared driveways and/or cross access driveways,

iv. reversal of access (e.g. installation of a driveway to a rear access road),

v. restriction of vehicle movements (e.g. elimination of left turns in and out),

vi relocation of parking,

vii. traffic demand management (e.g. a reduction in peak hour trips),

viii. signalization, or

ix. such other changes as may enhance traffic safety.

b. The requirements of the retrofit plan will be incorporated as conditions to the permit for the change or upgrade of use and the property owner will be responsible for the retrofit.

As noted in the Introduction the Model Ordinance generally applies in lightly to moderately developed areas. Pre-existing developments within these areas almost always have access features which are inconsistent with the requirements of the Model. It is generally unreasonable and difficult to impose immediate and potentially expensive access retrofits on such developments --unless that is the specific intent of an access management plan which has been implemented by popular mandate. The Model resolves this problem by authorizing the Planning Board to work with the property owner or developer to identify and implement (or require) necessary access changes. Four potential triggers are generally possible:

* *when the property owner or developer applies for a permit to enlarge, upgrade or change the property use;*

* *when the property owner or developer applies for a new access or highway permit;*

* *when an abutting property is developed or changes in use and the property owner or developer of the abutting property wishes or is willing to share a driveway and/or interconnect parking areas; and*

* *when a service or access road is constructed or the front road is reconstructed.*

G. Incentives

1. In order to ensure the safe and efficient movement of traffic along a road and between the road and properties abutting the road, shared driveways, cross access driveways, access and service roads, internal circulation systems, and interconnected parking are encouraged.

2. The TOWN Planning Board may grant a property owner adjustments to the permissible bulk, area and coverage requirements including setbacks, density, area, height, or open space otherwise required in the zoning district when such property owner elects to provide and maintain shared driveways, cross access driveways, access and service roads, internal circulation systems, or interconnected parking.

3. The TOWN Planning Board reserves the authority to determine, in its discretion, the adequacy of the access management amenities to be accepted and the particular bonus or incentive to be provided to a property owner.

H. Variance Standards

1. The granting of a variance shall be in harmony with the purpose and intent of this Ordinance and shall not be considered until every reasonable option for meeting the provisions of this Ordinance is explored or unless the variance is in the public interest.

2. Applicants for a variance must provide proof of unique or special conditions that make strict application of the provisions of this Ordinance impractical. This shall include proof that:

   i. indirect or restricted access cannot be obtained; and,

   ii. no reasonable engineering or construction solution can be applied to mitigate the condition; and,

   iii. no reasonable alternative access is available from a road with a lower functional classification than the primary road; or**,**

   iv. the variance is in the public interest.

3. Under no circumstances shall a variance be granted unless not granting the variance would deny all reasonable access, endanger public health, welfare or safety, or cause an exceptional and undue hardship on the applicant. No variance shall be granted where such hardship is self-created.

67.000 SECTION 67
ACCESS MANAGEMENT GUIDELINES

67.100 Purpose

The following guidelines shall be applied to all land uses locating on an "rterial or collector (as those terms are defined in the Access Management Plan) and requiring the site plan review. Implementation will occur both at the Township site plan review and stage during the road authority's review of the driveway permit request. Township reviews will be conducted in cooperation with the appropriate road authority, either the Michigan Department of Transportation (MDOT) or the Kalamazoo County Road Commission (KCRC). Following site plan approval by the Township, driveway permits consistent with Township requirements may be obtained from the road agency having jurisdiction.
(ord. no. 276 eff. Sept. 6, 1991)

67.200 Driveway Approval Process

The driveway approval process is as follows:

1. The applicant informally presents Site Plan to the Township Planning/Zoning Department. The Township offers suggestions consistent with the guidelines of Section 67.000 and the provisions of the Access Management Plan.

2. The applicant submits Site Plan to the Township Planning/Zoning Department and road authority for review (road authority staff should direct applicant of need to conform with Township requirements).

3. The Township Planning/Zoning Department contacts road authority staff for comments within 10 days of receipt/submission of Site Plan.

4. The Township Planning/Zoning Department presents access design recommendations to reviewing body.

5. The reviewing body takes action on Site Plan.

6. The Township Planning/Zoning Department informs road authority staff of decision.

7. The applicant requests driveway permit from road authority.

(ord. no. 276 eff. Sept. 6, 1991)

67.300 Driveway Design

1. Driveway Width:

   a) The standard two-way commercial driveway design shall include one ingress lane and one egress lane with a combined maximum throat width of thirty-six feet, measured from face to face of curb.
   b) Where exit volumes are expected to exceed 1000 vehicles per day, 100 during peak hours, or in areas where it is determined that undesirable motorist delays will occur, two exit lanes may be required. Such driveways should include one 15 foot ingress lane and two 11 ½ foot wide egress lanes (one marked exclusively for left turns). In areas where significant pedestrian/bicycle travel is expected, the ingress and egress lanes should be separated by a 4-10 wide median with pedestrian refuge area.
   c) For access arrangements which include two one-way driveways, each driveway shall be sixteen feet wide, measured perpendicularly, and angled to minimize the disruption on traffic flow.
   d) Left and right turn movements on and off roadways typically have the greatest impact on traffic flow and accident frequency. Therefore, where driveways are to be located in a segment defined in adopted Township corridor studies as having a high accident rate or significant traffic congestion/delays, or where left turn access is available through alternative means of access, the Township may require driveway design and signing which discourages certain turning movements.
   e) Where driveways are intended to control specific left and/or right turn ingress and egress, the designs reflected in the Access Management Plan shall apply.
   f) Reference the Access Management Plan for schematics of the designs indicated in Subsections a)-e). Similar designs may be accepted, provided that they are approved by the Michigan Department of Transportation or the Kalamazoo County Road Commission.

2. Engineering judgement should be utilized to determine the necessary throat length and storage guidelines. In the absence of adequate traffic volume data, application of the commonly-used values found in Table 1 is appropriate.

Table 1.-Minimum Throat Length Requirement

		Minimum Throat Length (Feet)	
Land Use	**Building Site**	**Collector**	**Arterial**
Apartments	<100 Units	25	50
	100-200 Units	50	75
	>200 Units	75	125
Office	<50,000 Sq ft	25	50
	50,001 - 100,000 Sq ft	25	75
	100,001 - 200,000 Sq ft	50	100
	200,001 - 500,000 Sq ft	100	150
	<500,000 Sq ft	125	250
Retail	<30,000 Sq ft	25	50
	> 30,000 Sq ft	25	75
Shopping Center	< 250,000 Sq ft	25	50
	250,001 - 500,000 Sq ft	50	75
	500,000 - 750,000 Sq ft	75	200
	> 750,000 Sq ft	125	250
Supermarket	<20,000 Sq ft	50	75
	>20,000 Sq ft	75	125
Restaurant	<15,000 Sq ft	25	50
	>15,000 Sq ft	25	75
Drive-in Restaurant	<2,000 Sq ft	25	75
	>2,000 Sq ft	50	100
Motel	<150 Rooms	25	75
	>150 Rooms	25	100
Light Industrial	<100,000 Sq ft	25	50
	100,001 - 500,000 Sq ft	50	100
	>500,000 Sq ft	50	200

3. Curb Radii:

   a) Standard two-way commercial driveways shall be designed with a minimum 35 foot radii where primarily passenger vehicle traffic is expected.
   b) For sites where truck traffic is expected, or where determined necessary by the Oshtemo Fire Department, a larger radii may be required**.**

4. All driveways should be on a ninety degree angle with the roadway unless physical modifications and directional signs are used to enforce intended one-way operations or restricted turning movements.

5. Deceleration lanes and tapers, where warranted by either through traffic conditions or expected high driveway volumes, should be used to avoid the disruption in the flow of traffic caused by motorists making right turns.

6. When alternatives to a two-way driveway are necessary to provide adequate driveway access to property fronting upon the arterial street system, the following progression of alternatives should be used:
   a) One standard, two-way driveway;
   b) Additional ingress/egress lanes on one standard, two-way driveway;
   c) Two, one-way driveways;
   d) Additional ingress/egress lanes on two, one-way driveways;
   e) Additional driveways on cross streets;
   f) Additional driveway on major streets.

   Restricted turns and roadway modifications will be considered in conjunction with alternative driveway designs.

7. Driveways shall be constructed of a paved surface resistant to erosion.

8. Driveways shall be constructed such that drainage is channeled away from the street right-of-way.

9. In order to ensure smooth on-site traffic circulation, directional signs and/or pavement markings may be required and shall be clearly visible and maintained.
   (ord. no. 276 eff. Sept. 6, 1991)

67.400 Number of Driveways.

1. Access for an individual parcel, lot, or building site for contiguous parcels, lots or building sites under the same ownership shall consist of either a single two-way driveway or a paired system wherein one driveway is

designed, and appropriately marked, to accommodate ingress traffic and the other egress traffic

2. For developments that can demonstrate that their combined driveway approach volumes (entering and exiting) will exceed 3,000 during a average day (or will be used by 300 vehicles during the peak hour of traffic for either the street or the use), and lacking access to a secondary street, a second driveway may be allowed along the major street provided that the additional driveway can meet the spacing requirements.

3. For a parcel, lot, or building site with frontage exceeding 300 feet, or where a parcel, lot, or building site has frontage on at least two streets, an additional driveway may be allowed, provided that a traffic analysis is submitted by the applicant showing that conditions warrant an additional driveway and that all driveways meet the spacing requirements.

4. Certain developments generate enough traffic to warrant consideration of an additional driveway to reduce delays for exiting motorists. Where possible, these second access points should be located on a side street, shared with adjacent uses or designed for right turn-in, right turn-out only movements. Uses where a second driveway could be considered are influenced by the trip generation characteristics of the uses and the volumes of the adjacent roadway, as shown in Table 2. (Note: Where the development has access to a signalized location, the approach volume of driveway traffic should be doubled that shown for unsignalized locations to warrant consideration of a second access.)

Table 2.- Development Characteristics that Warrant Consideration of an Additional Driveway

: multiple family development with over 500 units
: a grocery store of over 30,000 square feet (GFA)
: a shopping center with over 40,000 square feet (GFA)
: a hotel or motel with over 400 rooms
: industrial developments with over 300,000 square feet (GFA) or 350 employees (although a secondary entrance for trucks should be allowed)
: warehouses of over 750,000 square feet (GFA) or 350 employees
: a mobile home park with over 600 units
: general office building of 150,000 square feet (GFA) or 500 employees
: medical office building of 60,000 square feet (GFA) or 200 employees
: fast food restaurant of over 6,000 square feet (GFA)
: sit down restaurant of over 20,000 square feet (GFA)
(ord. no. 276 eff. Sept. 6, 1991)

67.500 Driveway Spacing.

1. Driveway spacing will be based on posted speed limits along the property frontage as indicated in Table 3.

Table 3.- Recommended Driveway Spacing Distances

Posted Speed Limit (MPH)	Driveway Spacing* (Feet)
30	125
35	150
40	185
45	230
50	275
55	350

*Measured centerline to centerline

2. Driveway spacing from intersecting streets shall be subject to the schedule outlined in Table 4.

Table 4.-Driveway Spacing from Intersections

Driveways Along Arterials		
Intersecting Street	**Full Movement Driveway (Feet)**	**Channelized for right-turn-in, right-turn-out (Feet)**
Arterial Signalized	250	100
Non-Arterial	125	75
Other Street	100	75

Driveways Along Side Streets Intersecting Arterials		
Intersecting Streets	**Full Movement Driveway (Feet)**	**Channelized for right-turn-in, right-turn-out (Feet)**
Arterial Signalized	200	100
Non-Arterial	100	75
Other Street	75	75

*Measured from the nearest edge of the driveway throat to the nearest edge of the intersection

Reference the Access Management Plan for an illustration of typical driveway spacings required by Tables 3 and 4.

3. a) If the amount of street frontage is not sufficient to meet these criteria, the driveway shall be constructed adjacent to the property line furthest from the intersection

   b) Future shared use or development of a frontage road/service drive will be encouraged.

   c) In areas where accidents and congestion due to left turn traffic movement are a concern, designs to discourage left turn ingress and/or egress will be considered.

4. If a driveway curb radius extends beyond the frontage of the property, written consent from the affected property owner allowing the design must be provided.

5. In order to minimize left turn conflicts at non-signalized locations, driveways shall be offset a minimum of one hundred fifty feet, measured centerline to centerline, or aligned with those across the street.

6. Where parcels, lots, or building sites have frontage or access on more than one roadway, access shall be provided from the lesser traveled street. Where spacing requirements can be met, high traffic volumes will be generated, or the subject side street is inappropriate for nonresidential traffic, access onto the main roadway will be considered.

7. In the case of expansion, alteration or redesign of an existing development

where existing driveways do not comply with the guidelines set forth herein, the closing, relocation, or redesign of the driveway may be required.
(ord. no. 276 eff. Sept. 6, 1991)

67.600 Shared Access Reduction Schedule.

1. When a driveway is established to serve two or more parcels, lots, or building sites, and where such parcels, lots, or building sites are not served by any other access point, the total parcel, lot, or building site size and road frontage required by the Township Zoning Ordinance shall be reduced by ten percent.

2. When a frontage road or service drive is established on a parcel, lot, or building site, the total parcel, lot, or building site size, road frontage, and number of parking spaces required shall be reduced by ten percent.

3. When a cross parking arrangement or agreement has been reached (and written evidence thereof in existence) regarding two or more parcels, lots, or building sites, the number of parking spaces required for each of the parcels, lots, or building sites in question shall be reduced by ten percent.
(ord. no. 276 eff. Sept. 6, 1991)

67.700 Deviation From Guidelines.

For any development from which a deviation from the guidelines set forth herein is requested, the applicant shall submit to the Township a report containing the following information:

1. Identification of traffic conditions and/or site restrictions

2. Justification of need

3. Identification of the impact of the development and its proposed access facilities on the operation of the abutting street

4. Description of the internal circulation and parking system

5. Compliance with the objectives of the Township's access management guidelines.

Upon adequate submission of the aforementioned information, the reviewing body shall determine if alternate access arrangements or site designs are warranted and comply with the Township's access management objectives.
(ord. no. 276 eff. Sept. 6, 1991)

Tri-County Regional Planning Commission Model Zoning Ordinance - Arterial Street
Access Regulations

ARTICLE I ARTERIAL STREET ACCESS DRIVEWAY REGULATIONS

Section 1.1 INTENT AND PURPOSE

This articles intended to recognize the unique and disparate Functions of major and minor arterials which include long distance traffic movement as well as land access to individual traffic generators. It is the purpose of this article to serve the public interest by minimizing operational difficulties caused by these generally incompatible traffic functions.

The regulations of this article strive to promote the efficient use of public thoroughfares, protect the public investment in long distance traffic carrying facilities, to diminish hazardous traffic conditions, minimize accident experience and property damage, and to avoid future degradation of arterial street traffic capacity. Simultaneously, the regulations strive to protect the right' of abutting land owners to reasonable access.

Section 1.2 APPLICABILITY

The regulations set forth in this article will apply to all major and minor arterials so designated on the official municipal thoroughfare map. For the purposes of applicability to this article any additions or deletions to the Designated arterial system must be made by legislative action of the municipal body so designated, and approved by the applicable highway authority having jurisdiction over the arterial in question. These regulations shall apply as an overlay district to the general ordinance. It will supplement the regulations
presently in force for zoning districts abutting an arterial roadway. Construction or alteration of a direct access driveway along any public street or highway shall require issuance of an access permit from .

Section 1.3 PERFORMANCE STANDARDS

It shall be unlawful to construct or utilize any direct access driveway which does not meet the following criteria:

a) Any driveway design utilized must allow an entering

vehicle turning speed of 15 mph to help reduce interference with through street traffic.

b) Driveway design and placement must be in harmony with internal circulation and parking design such that the entrance can absorb the maximum rate of inbound traffic during a normal weekday peak traffic period as determined by a competent traffic survey.

c) There must be sufficient on-site storage to accommodate at least three (3) queued vehicles waiting to park, or exit without utilizing any portion of the street right-of-way or in any other way interfere with street traffic.

d) Provision for circulation between adjacent parcels should be provided through coordinated or joint parking systems, or other method, as specified in the Municipal Comprehensive Plan.

e) Drive away entrance must be able to accommodate all vehicle types having occasion to enter the site, including delivery vehicles.

f) Driveway placement should be such that loading and unloading activities will in no way hinder vehicle ingress or egress.

g) Direct access driveway placement must be such that an exiting vehicle has an unobstructed sight distance according to the following schedule:

Highway Design Speed MPH	Sight Distance FEET
30	200
35	225
40	275
45	325
50	350

h) Driveway design must be such that an entering vehicle will not encroach upon the exit lane of a two-way driveway. Also, a right turning exiting vehicle will be able to utilize only the first through traffic lane available without encroachment into the adjacent through lane.

Section 1.4 DESIGN CRITERIA

The design features described and illustrated in this section shall be used by the applicant in dimensioning a proposed driveway or driveway system or plans accompanying the driveway permit application. Figure 1 depicts the standard minimum driveway design. Every driveway constructed along a public thoroughfare must at least meet the listed design criteria.

If projected driveway traffic volumes exceed 750/vehicles per day, a departure from the standard design may be permitted. The municipality may specify a driveway system which will accommodate vehicle movements normally expected without creating undo congestion or hazard on the highway.

The applicant may also request a particular alternative design as part of the site plan submitted accompanying the driveway application permit.

a) The following figures (1 through 9) and tables (1 through 9) depict driveway standards and reasonable working ranges for each standard.

FIGURE 1

STANDARD TWO-WAY DRIVEWAY
PERMITTED BY RIGHT

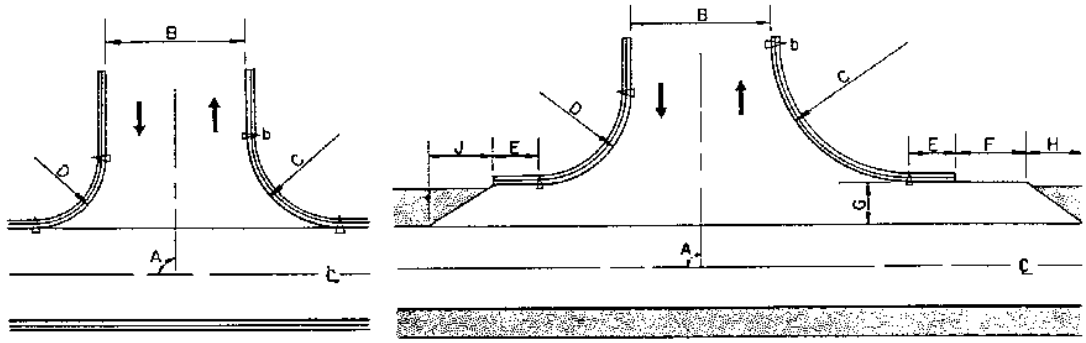

Single Two-way Commercial Driveway
Curbed Highway

Single Two-way Commercial Driveway
Uncurbed Highway

TABLE 1 STANDARDS FOR DESIGN

Design Feasures		Curbed Highway		Uncurbed Highway	
		Standard	Range	Standard	Range
Intersecting Angle	A	90°	80° to 100°	90°	80° to 100°
Driveway Width	B	30ft	25 to 50 ft	30ft	25 to 50 ft
Entering Radius	C	20ft	15 to 50 ft	30ft	15 to 50 ft
Exiting Radius	D	15ft	15 to 50 ft	20ft	15 to 50 ft

The standard shall be used unless the zoning administrator in consultation with the traffic engineer determines that another dimension within the range is more suitable for a particular site or special condition and is approved by the highway authority and municipality.

b) Right-turn lanes and tapers

Right-turn lanes and tapers will be required when

1) expected right turn ingress movements meet or exceed 50/hour during a typical weekday peak traffic period.

2) when driveway volumes are expected to meet or exceed 1,000 vehicles per day.

3) When the Highway Authority or Municipal Engineer can document, through traffic analysis, that such treatment is necessary to avoid congestion and/or unsafe conditions on the public thoroughfare.

A right-turn lane shall be preceded by a taper. The design feature dimensions of a right-turn lane and taper shall conform to those given in Figure 2 and Table 2.

FIGURE 2 RIGHT-TURN LANE AND TAPERS

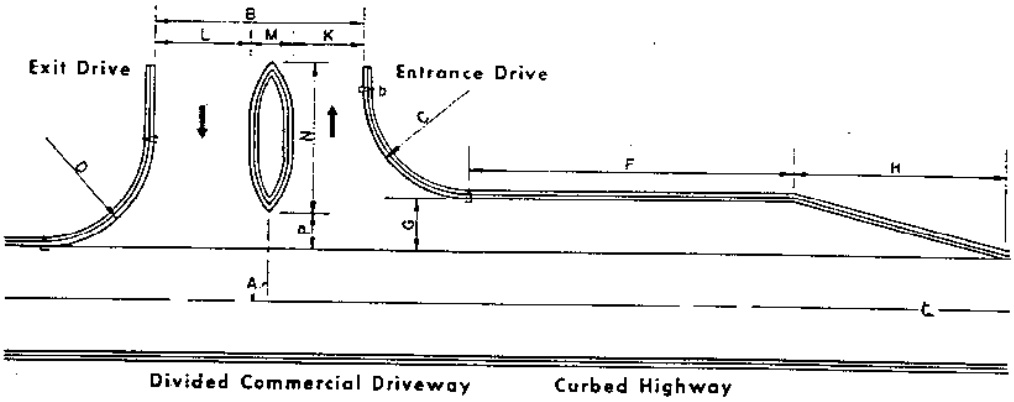

TABLE 2 STANDARDS FOR DESIGN

RIGHT -TURN LANE AND TAPERS

Design Feasures		Curbed Highway		Uncurbed Highway	
		Standard	Range	Standard	Range
Curb Ending	b	Not Applicable		10ft	no range
Right-turn Lane Length	F	as determined by site plan review			
Right-turn Lane Width	G	12ft	10 to 15 ft	12ft	10 to 15 ft
Entering Tapers	H	150ft*	50 to 150ft	150ft	50 to 150ft
Exiting Radius	D	Not Applicable		50ft	50 to 150ft

*If a right-turn lane is used, the Entering Taper standard shall be 50 ft. Without a right-turn lane, the Entering Taper standard shall be 150 ft.

The standard shall be used unless the zoning administrator in consultation with the traffic engineer determines that another dimension within the range is suitable for a particular site or special condition and is approved by the highway authority and municipality.

c) Driveway Profile

Driveway profiles shall be determines using the following criteria:

1) The grade of a two-way, one-way or divided commercial driveway shall not exceed 1.5% for a minimum distance of 25 feet from the edge of the pavement. Beyond this distance the grade shall not exceed 8%.

2) If the highway is curbed and it the sidewalk is ten (10)feet or less from the edge of the pavement, the grade of a driveway shall be the grade required to meet the sidewalk elevation but if that grade would exceed the maximums specified in paragraph (1), the sidewalk shall be either tilted or inclined.

3) If the highway is uncurbed, the grade of the driveway between the highway edge of pavement and the edge of the shoulder shall conform to the slope of the shoulder to the edge of the driveway approach. From that point the dimensions specified in Section 1.4 will apply.

4) For a driveway on an upgrade towards the highway, a grade of 1.5% for a distance of 100 feet from the edge of the pavement is required. beyond this distance, the grade shall not exceed 40% and the difference in grades where there is a change of grace shall not exceed 3%.

5) Vertical curves with a minimum length of 15 feet shall "De provided at a change of grade of 4% or more.

6) If the sidewalk elevation has to be adjusted to meet the driveway, the sidewalk shall be inclined at a rate not to exceed one (1) foot vertical for every 24 feet horizontal.

d) Drainage

1) A driveway shall be constructed so that it does not adversely affect the highway drainage. The drainage and the stability of the highway subgrade shall not be altered by driveway construction or roadside development.

FIGURE 3
STANDARD PROFILE DESIGN

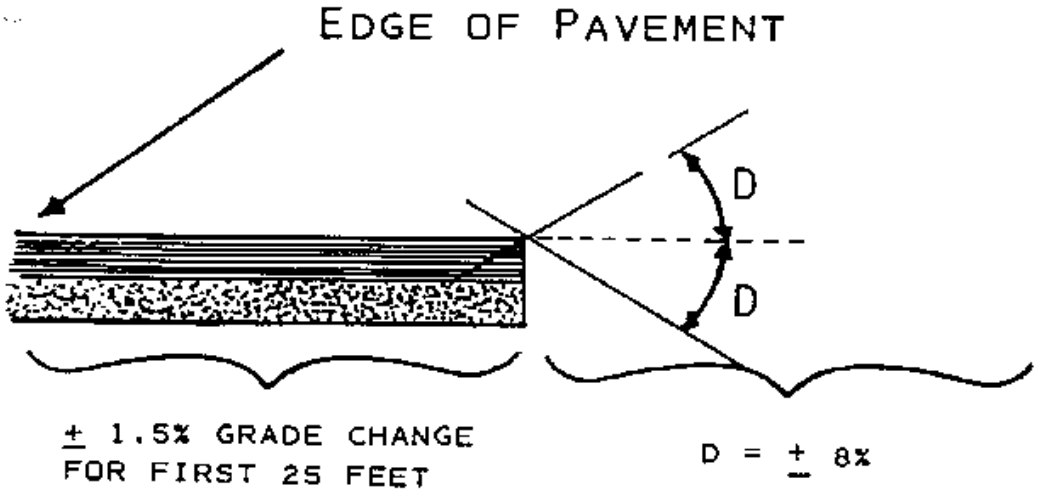

2) Drainage from adjacent parking or storage areas on private property in excess of existing drainage shall not be discharged into the highway drainage system.

e) Surfacing and curbing along curbed highways

If a highway is curbed, the following driveway surfacing and curbing requirements apply:

1) A driveway shall be paved and curbed to either the right-of-way line or to the point of curvature between the driveway edge and the larger radius, point b in figure 1, as determined by the engineer.

f) Surfacing and curbing along uncurbed highways

If a highway is uncurbed, the following driveway surfacing and curbing requirements apply:

1) A driveway shall be paved and curbed to either the right-of-way line or to the point of curvature between the driveway edge and the larger radius, point b in figure 2, except a commercial driveway may De uncurbed where there is a proper ditch and other adequate roadside control or delineation, as Determine by the engineer. The curb ending adjacent to the highway shall be located at least 13.5 feet from and parallel to the edge of the pavement.

g) Surface materials and thickness

The surface of a paved driveway, excluding right-turn lanes, shall be concrete, bituminous or equivalent surfacing-material. The thickness of the surface and the base to be used shall be sufficient to provide the bearing capacity needed to carry the proposed traffic loads. A 2 1/2 inch, 250 pounds per square yard, bituminous mix on 8 inches of compacted gravel, 8 inches of un-reinforced concrete or equivalent surfacing material which meets current MDOT Standard Specifications for highway Construction is acceptable for normal driveway traffic loads over stable soil.

h) Right-turn lanes and tapers

1) The pavement or a right-turn lane and accompanying tapers shall match the highway pavement, unless the highway authority permits the use of an equivalent pavement.

2) The cross slope of a right-turn lane and tapers shall be:

(a) A continuation of the cross slope of the highway if the highway is curbed.

(b) Equal to the shoulder slope if the highway is uncurbed.

i) Shoulders

1) The surface of the shoulder adjacent to a right-turn lane and tapers shall be of the same material as the highway shoulder and conform to the current Michigan Department of Transportation Standard Specifications for Highway Construction.

2) If the distance between 2 paved commercial driveways

serving the same property is less than 100 feet, measured between adjacent ends of the curb endings, the applicant shall pave the shoulder between the driveways.

j) Driveway curb details

1) The driveway curb shall either match the existing highway curb or shall conform to the current standards for curb and gutter.

Section 1.5 OPTIONAL DRIVEWAY DESIGNS

Under the following conditions an optional driveway design may be implemented:

a) When driveway volumes are expected to meet or exceed 1,000 vehicles per day.

b) When expected turning ingress or egress movements meet or exceed 50/hour during a typical weekday peak traffic period as determined by a competent traffic study or generally accepted trip generation table such as the Institute of Transportation Engineers Trip Generation Manual.

c) When in the judgment of the highway authority or municipal traffic engineer, specific site conditions require alternative design treatments to provide for safe and efficient driveway operation.

d) When a joint or coordinated access-parking system is being used.

e) When a permittee seeks and receives approval for an innovative method for access design or operations as provided for in Section 1.6.

Section 1.6 OPTIONAL DRIVEWAY DESIGN CRITERIA

a) The following designs may be permitted as a conditional use upon adequate site plan reviews:

FIGURE 4
ONE-WAY DRIVES

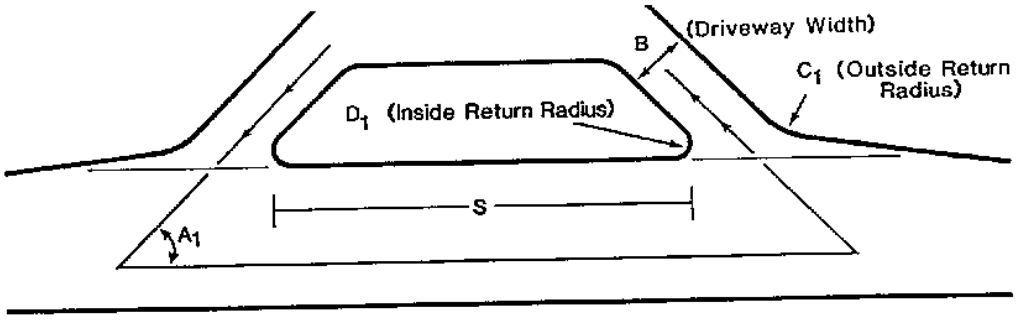

TABLE 3
ONE-WAY DRIVES

		CURBED HIGHWAY		UNCURBED HIGHWAY	
DESIGN FEATURES		Standard	Range	Standard	Range
Distance between Driveways	S	not applicable	40 to 500 ft	not applicable	40 to 500 ft
Intersecting Angle	A	not applicable	45° to 90°	not applicable	45° to 90°
Driveway Width	B	16 ft	16 to 30 ft	16 ft	16 to 30 ft
Outside Radius	C_1	20 ft	15 to 50 ft	20 ft	15 to 50 ft
Inside Radius	D_1	5 ft	5 to 15 ft	5 ft	5 to 15 ft

The standard shall be used unless the zoning administrator in consultation with the traffic engineer determines that another dimension within the range is more suitable for particular site or special condition and is approved by the Highway Authority and Municipality.

The standard shall be used unless the zoning administrator in consultation with the traffic engineer determines that another dimension within the range is more suitable for particular site or special condition and is approved by the Highway Authority and Municipality.

FIGURE 5

DIVIDED DRIVEWAY
(Depicted in conjunction with a right turn lane and taper)

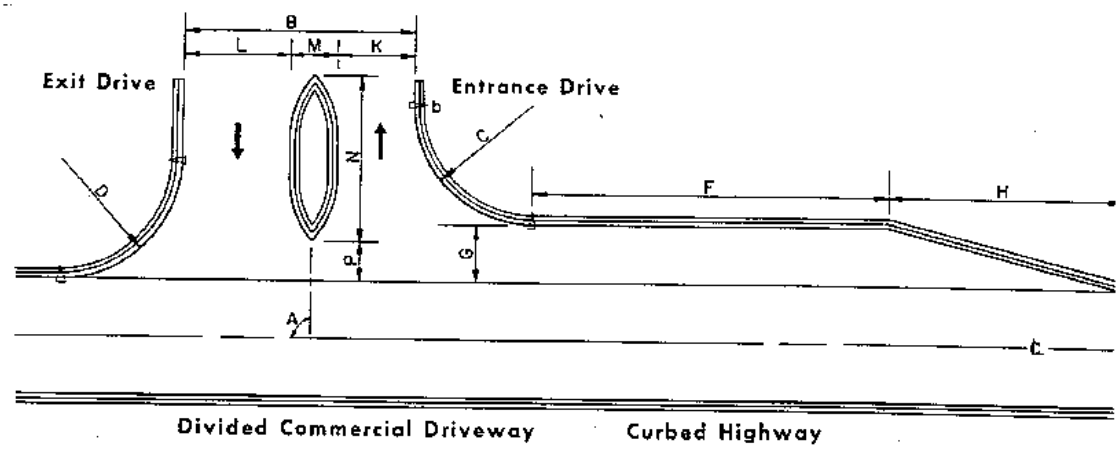

TABLE 4 DESIGN STANDARD
DIVIDED DRIVEWAY

Design Features		Curbed Highway		Uncurbed Highway	
		Standard	Range	Standard	Range
Intersecting Angle	A	90°	75° to 105°	90°	75° to 105°
Driveway Width	B	48 ft	42 to 90 ft	48 ft	42 to 90 ft
Entering Radius	C	25ft	15 to 50 ft	25 ft	15 to 50 ft
Exiting Radius	D	25ft	10 to 50 ft	20 ft	10 to 50 ft
Entrance Drive Width	K	16 ft	16 to 30 ft	16 ft	16 to 30 ft
Exit Drive Width	L	22 ft	16 to 30 ft	22 ft	16 to 30 ft
Island Width	M	10 ft	10 to 30 ft	10 ft	10 to 30 ft
Nose Offset	P	8 ft	2 to 10 ft	14 ft	12 to 17 ft
Island Length	N	35 ft	20 to 150 ft	35 ft	20 to 150 ft

The standard shall be used unless engineering judgment determines that another dimension within the range is more suitable for a particular site or special condition and is approved by the highway authority and municipality.

The standard shall be used unless engineering judgment determines that another dimension within the range is more suitable for a particular site or special condition and is approved by the highway authority and municipality.

TABLE 5
DESIGN STANDARDS
DUAL SERVICE DRIVE

DESIGN FEATURES		CURBED HIGHWAY		UNCURBED HIGHWAY	
		Standard	Range	Standard	Range
Intersecting Angle	A_R	60°	45 to 90°	60°	45 to 90°
Entering Radius	C_R	15 ft	10 to 50 ft	20 ft	10 to 50 ft
Exiting Radius	D_R	10 ft	5 to 25 ft	5 ft	5 to 25 ft
Intersecting Angle	A_L	120°	90 to 135°	120°	90 to 135°
Entering Radius	C_L	10 ft	5 to 25 ft	5 ft	5 to 25 ft
Exiting Radius	DL	15 ft	5 to 50 ft	20 ft	5 to 50 ft
Driveway Width	B	30 ft	12 to 50 ft	30 ft	15 to 50 ft
Distance Between Driveways	S	20 ft	10 to 150 ft	20 ft	10 to 150 ft

The standard shall be used unless the zoning administrator in consultation with the traffic engineer determines that another dimension within the range is more suitable for a particular site or special condition and is approved by the highway Authority or Municipality.

FIGURE 6
DUAL SERVICE DRIVE

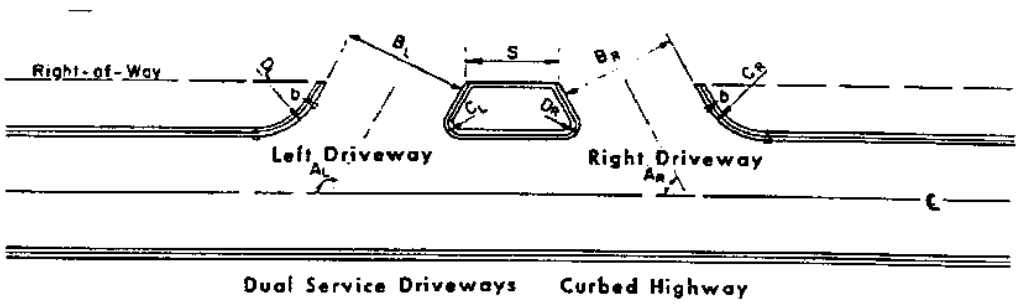

The standard shall be unless the zoning administrator in consultation with the traffic engineer determines that another dimension within the range is more suitable for a particular site or special condition and is approved by the Highway Authority or Municipality.

FIGURE 7
EXAMPLE COORDINATED ACCESS PARKING SYSTEM

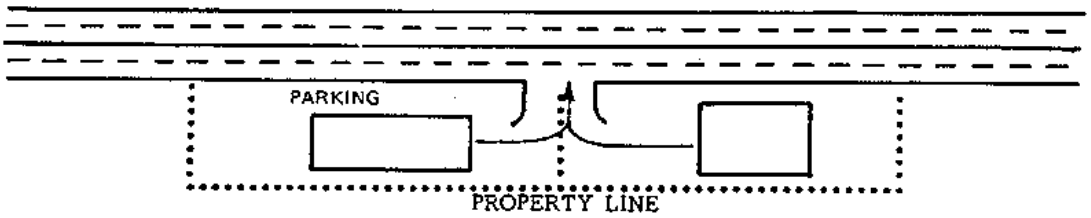

SHARED ACCESS ON PROPERTY LINE

FIGURE 8
EXAMPLE SERVICE DRIVES

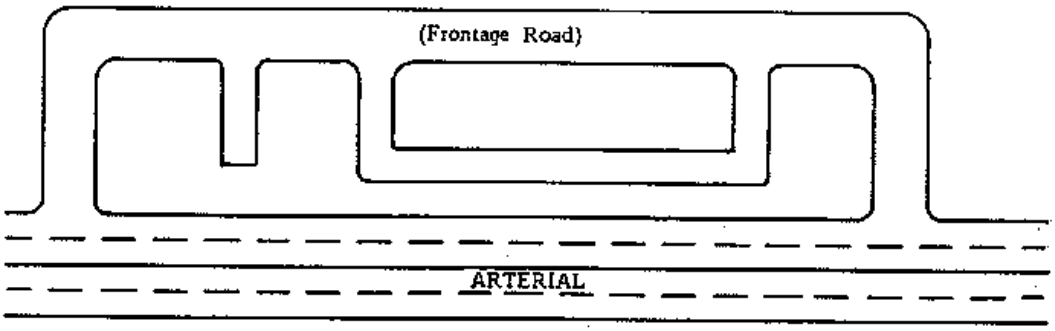

INDUSTRIAL PARK WITH FRONTAGE ROAD

*Design standards based upon site plan review.

FIGURE 9
CONTINUOUS RIGHT LANE

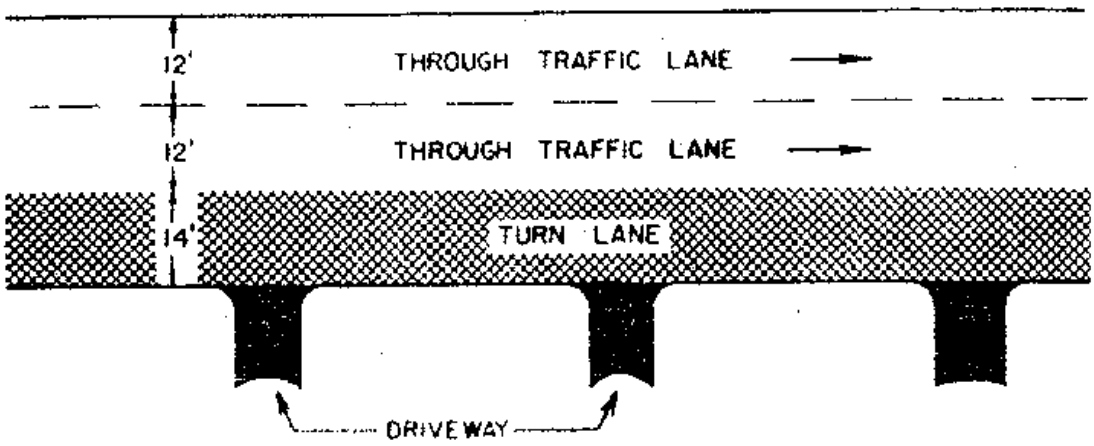

Section 1.7 CONSISTENCY WITH COMPREHENSIVE PLAN

In some cases, on particularly congested arterials, the municipal plan may call for specific innovative treatment of access control. Examples may include service drives, continuous right-turn lanes, access off and collector streets, commercial parks, and combined, coordinated parking/access systems. In these regulations, and the performance standards, may be considered through site plan view.

Section 1.8 DRIVEWAY SPACING

Driveway spacing will be determined as a function of arterial highway operating speeds. Spacing will be determined according to the following schedule.

TABLE 6

Highway Speed Limit	Minimum Spacing (Feet)
25 mph	105
30 mph	125
35 mph	150
40 mph	185
45 mph	230
50 mph	275

These spacings are based on average vehicle acceleration and deceleration rates and are considered necessary to maintain safe traffic operation. Spacing will be measured from the midpoint of each driveway. In the event that a particular parcel or parcels lack sufficient arterial frontage to maintain adequate spacing the land owner(s) have one of two options.

1) They can seek a variance from the zoning administrator from minimum spacing, but in no case can the variance be greater than the next lowest classification on Table For example, on a 40 mph arterial requiring a 185' spacing, the distance may be reduced to no less than 150' which is the standard for a 35 mph facility.

2) The adjacent land owners may agree to establish a common driveway. In such case the driveway midpoint should be the property line between the two parcels. The driveway must meet standard specifications, and

the estimated driveway volume will be the sum of the trip generation rate of both land uses in question.

3) Bonus for combining access points.

When two adjacent property owners agree to combine access points, the municipality will grant an incentive bonus. The total lot size and road frontage normally required will each be reduced by 15% for both land owners. In addition, the required number of parking spaces will be reduced by 15% for each development. (Site circulation and safety standards will still be enforced).

Section 1.9 NUMBER OF DRIVEWAYS PER PARCEL

a) A maximum of one (1) driveway opening shall be permitted to a particular site from each of any one (1) or two (2) abutting streets.

b) When in the opinion of the municipality's or highway authority's traffic engineer, and in the views of the permittee, it is in the interests of good traffic operation, the Board may permit:

one (1) additional driveway entrance along a continuous site frontage in excess of 300 feet, or two (2) additional driveway entrances along a continuous site frontage of in excess of 600 feet.

c) Where a dual service driveway is used it will be considered, for purposes of this section, to be only one direct access driveway.

d) In the case of dual one-way driveways, one (1) pair may be used per 250' of frontage. Only one (1) pair of one-way drives may be used per street frontage.

Section 1.10 CORNER CLEARANCE

All direct access driveways shall be constructed such that the point of tangency of the curb return radius closest to a signalized or stop-sign controlled intersection be at least 40' from the perpendicular curb face of the intersecting street. Using a 15' driveway radius, the edge of the driveway throat shall be 50' from

the curb face of the perpendicular intersecting street. The driveway radius shall not compound with the intersection corner radius. Figure 10 depicts these design criteria.

Section 1.11 PERMIT APPLICATION

All applications for driveway approach permits shall be made on a form prescribed by the municipality and highway authority. It shall be accompanied by clear scaled drawings in triplicate showing the following items:

a)

1) Location and size of all structures proposed on the site.

2) Size and arrangement of parking stalls on aisles.

3) Proposed plan of routing motor vehicles entering and leaving the site.

Figure 10
Required Corner Clearance

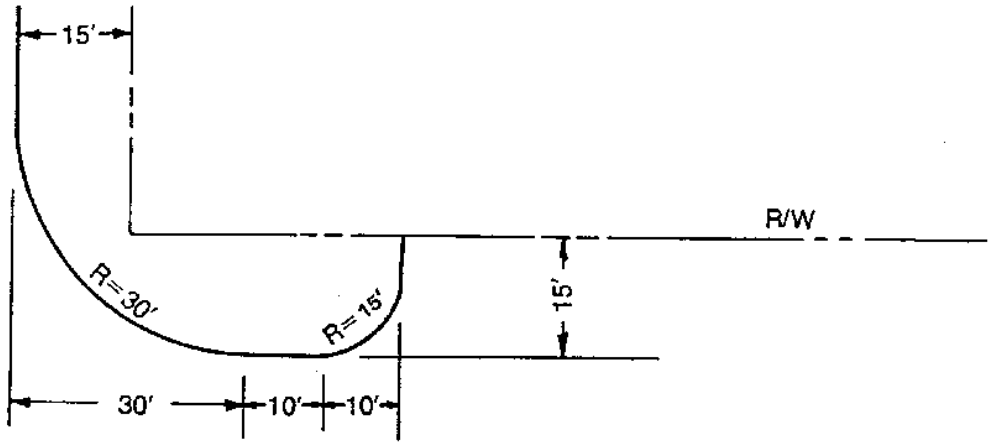

4) Driveway placement

5) Property lines

6) Right-of-Way lines

7) Intersecting roads and streets within 300' either side of the property on both sides of the street.

8) Width of right-of-way

9) Width of road surface

10) Type of surface and dimensions of driveways

11) Type of surface and dimension of parking area

12) Proposed turning radii

13) Proposed treatment of right-of-way adjacent to driveways and between the right-of-way line and property line.

14) Design dimensions of any alternative or innovative access design.

b) Application for driveway approach permits shall be made a@ either the municipality or highway authority having jurisdiction on the arterial in questions.

c) Said application will then be reviewed by both the municipality's engineering division and by the traffic engineering division of the highway authority. No application will be considered approved, nor will any permit be considered valid unless both above mentioned agencies have indicated approval. In no case shall the approval of only one agency be considered approval of the entire permit.

d) On receipt and approval of the permit application, a permit shall be granted for construction which shall conform to the application. Driveway approaches and parking facility requirements must be completed within one (1) year after the permit is issued, otherwise the permit will automatically terminate.

e) The permittee shall assume all responsibility for all maintenance of such driveway approaches from the right-of-way line to the edge of the traveled roadway.

f) Where a permit has been granted for entrances to the parking facility, said facility shall not be altered or the plan of operation changed until a revised plan has been submitted and approved as specified in this section.

g) Application for a permit to construct or reconstruct any driveway entrance and approach to a site shall also cover the reconstruction or closing of all non-conforming or unused entrances and approaches to the same site at the expense of the property owner.

h) When a building permit is sought for the reconstruction or remodeling of an existing site or a zoning or occupancy certificate is sought for use or change of use for any land, buildings, or structures, all of the existing, as well as proposed driveway approaches and parking facilities shall comply, or be made to comply, with all design standards as set forth in this ordinance prior to the issuing of a zoning or occupancy certificate.

i) The municipality, and highway authority acting jointly may require a performance bond or cash deposit in any sum not to exceed $5,000 for each such approach or entrance to insure compliance with all of the terms of the permit. Such bond shall terminate and deposit be returned to the permittee when the terms of the permit have been complied with or when the permit is canceled or terminated.

Zoning Ordinance Regulations for Tittabawassee Road Corridor Access Control Regulations

The Saginaw Metropolitan Area Transportation Study would like to thank the following people for their contributions to this document:

The Tittabawassee Road Corridor Study Committee
Jay Cravens, Cascade Township
Jay Fowler, City of Grand Rapids
Paul Hamilton, Tri-County Regional Planning Commission
Michigan Society of Planning Officials
Terry Switzer, City of Kentwood
Mark Wyckoff, Planning and Zoning News
William Hartwig, Michigan Department of Transportation
c.l.u.e

TABLE OF CONTENTS

SECTION **PAGE**

1. Intent and Purpose 4
2. Applicability 4
3. Description of Access Control Zone 5
4. Performance Standards 5
5. Permit Application 6
6. Permit Review Process 6
7. Driveway Spacing 9
8. Number of Driveways per Parcel 19
9. Design Criteria 10
10. Corner Clearance 16
11. Consistency with Comprehensive Plan 16
12. Temporary Permits 16
13. Nonconforming Driveways 17
14. Variances for Driveway Designs 18
15. Sample Driveway Design Criteria allowed by Variance 19

FIGURES

1. Standard Two-Way Drive 10
2. Right Turn Lane and Tapers, Entering 12
3. Right Turn Lane and Tapers, Exiting 12
4. Standard Profile Design 14
5. Dual Service Drive 19
6. Sample Coordinated Access Parking System 19
7. Sample Service Drives 20
8. Continuous Right Lane 20

TABLES OF STANDARDS FOR DESIGN

1. Driveway Spacing 9
2. Two-Way Drive 11
3. Right Turn lane and Tapers 13
4. Dual Service Drive 19

ARTERIAL STREET ACCESS DRIVEWAY REGULATIONS

Section 1. INTENT AND PURPOSE

This article is intended to recognize the unique and disparate functions of major and minor arterials that include long distance traffic movement as well as land access to individual traffic generators. It is the purpose of this article to serve the public interest by minimizing operational difficulties caused by these generally incompatible traffic functions.

The regulations of this article strive to promote the efficient use of public thoroughfares, protect the public investment in long distance traffic carrying facilities,, diminish hazardous traffic conditions,, minimize accidents and property damage, and avoid future degradation of arterial street traffic capacity. Simultaneously, the regulations strive to protect the right of abutting land owners to reasonable access.

These regulations are in effect in all communities that abut the Tittabawassee Road Corridor, as defined in *section 2***.** The presence of this language in each Municipality's Zoning ordinance is intended to promote the consistent and continued intent and purpose of this ordinance.

Section 2. APPLICABILITY

The regulations set forth in this article will apply to the Tittabawassee Road Corridor from M-47 (Midland Road) to the Saginaw River and as designated on the official municipal zoning map. These regulations shall apply as an overlay district to the general ordinance, as shown on the official _____ (municipal name) Zoning Map.

These regulations will only apply when the average daily bidirectional traffic volumes on Tittabawassee Road, for one half mile east or west of the proposed access point, exceed 13,000 vehicles. In addition, these regulations will apply if traffic generated by any new development or change to an existing development causes the average daily bidirectional traffic volume to exceed 13,000 vehicles for one half mile east or west of the proposed access point.

As an overlay zone, these regulations will apply in addition to those regulations presently in force. Construction or any alteration of a direct access driveway, except resurfacing, along any public street, road or highway shall require issuance of an access permit from the Planning Commission and the Saginaw County Road Commission.

The Saginaw County Road Commission will count and determine the average daily traffic count of Tittabawassee Road for purposes of this ordinance.

Section 3. DESCRIPTION OF ACCESS CONTROL OVERLAY ZONE

The overlay zone in _____ (municipality name) will be along the frontage of Tittabawassee Road from the Saginaw River to M-47 (Midland Road), for a depth of six hundred (600') feet. Intersecting road frontages will also be included in the overlay zone for a distance of six hundred (600') feet. The overlay zone is shown on the _____ (municipality name) Zoning Map.

Section 4. PERFORMANCE STANDARDS

It shall be unlawful to construct or utilize any direct access driveway which does not meet the following criteria:

1) Any driveway design utilized must allow an entering vehicle turning speed of 15 mph to help reduce interference with through street traffic.

2) Driveway design and placement must be in harmony with internal circulation and parking design such that the entrance can absorb the maximum rate of inbound traffic during a normal weekday peak traffic period as determined by a traffic survey method approved by the Planning commission.

3) There must be sufficient on-site storage to accommodate at least five (5) queued vehicles waiting to park, or exit without utilizing any portion of the street right-of-way or in any other way interfering with street traffic.

4) Provisions for circulation between adjacent parcels should be provided through coordinated or joint parking systems, or other methods, determined at the time of site plan review.

5) Driveway entrances must be able to accommodate all vehicle types having occasion to enter the site, including delivery vehicles.

6) Driveway placement should be such that loading and unloading activities will in no way hinder vehicle ingress or egress.

7) Direct access driveway placement must be such that an exiting vehicle has an unobstructed sight distance from the stop bar, according to the following schedule:

Road Design Speed	Sight Distance
30 mph	220 feet
35 mph	225 feet
40 mph	275 feet
45 mph	325 feet
50 mph	350 feet

8) Driveway design must be such that an entering vehicle will not encroach upon the exit lane of a two-way driveway. In addition, an exiting vehicle turning right must be able to enter traffic utilizing only the first through traffic lane available without encroachment into the adjacent through lane.

Section 5. PERMIT APPLICATION

All applications for driveway approach permits shall be made on a form prescribed by and available at _____ (municipal name) and the Saginaw County Road Commission.

1) Permit applications shall be accompanied by clear, scaled drawings (minimum of 1''=20') in triplicate showing the following items:

   a) Location and size of all structures proposed on the site.
   b) Size and arrangement of parking stalls on aisles.
   c) Proposed plan of routing motor vehicles entering and leaving the site.
   d) Driveway placement.
   e) Property lines.
   f) Right-of-Way lines.
   g) Intersecting roads and streets within 300' either side of the property on both sides of the street.
   h) Width of right-of-way.
   i) Width of road surface.
   j) Type of surface and dimensions of driveways.
   k) Proposed turning radii.
   l) Proposed treatment of right-of-way adjacent to driveway(s) and between the right-of-way line and property line. Show all proposed landscaping, signs, etc.
   m) Traffic analysis and trip generation survey results, obtained from a licensed engineer.
   n) Design dimensions and justification for any alternative or innovative access design.
   0) Dumpsters or other garbage containers.

Section 6. PERMIT REVIEW PROCESS

1) Application for an Access Permit may be obtained from the Saginaw County Road commission or _____(municipal name).

2) The completed application must be received by the _____ (municipal name) Zoning Administrator at least 14 days prior to the Planning Commission meeting where the Permit will be reviewed.

3) The applicant, the Saginaw County Road Commission and the Zoning Administrator or Planning commission representative may meet prior to the Planning Commission meeting to review the application and proposed Access Design.

4) The Planning Commission shall review and recommend approval, or denial, or request additional information they also shall forward the Access Application to the Saginaw County Road Commission for their review.

5) The Saginaw County Road Commission shall review the Access Permit application and conclusions of the Planning commission. one of three actions may result;

   a) If the Planning Commission and the Road commission approve the application as submitted, the Access Permit shall be granted.

   b) If both the Planning commission and the Road Commission deny the application, the permit shall not be granted.

   c) If either the Planning Commission or Road Commission, requests additional information, approve with conditions, or do not concur in approval or denial, there shall be a joint meeting of the administrative staff of the Saginaw county Road Commission, _____(municipal name) Planning commission and the applicants The purpose of this meeting will be to review the application to obtain concurrence between the Planning Commission and the Road commission regarding approval or denial.

      No application will be considered approved, nor will any permit be considered valid unless ***both*** above mentioned agencies have Indicated approval.

6) The Zoning Administrator shall keep a record of each application for an Access Permit that has been submitted, including the disposition of each one. This record shall be a public record.

7) An Access Permit remains valid for a period of one year from the date it was issued. If the Permit holder fails to begin earnest construction authorized by the Access Permit by the end of one (1) year, the Permit is automatically null and void. Any additional rights that have been granted by the Planning Commission or the Zoning Board of Appeals, such as Special Use Permits, or variances, expire together with the Access Permit. Any performance guarantee shall be refunded to the Permit holder unless the failure to initiate activity has resulted in costs to the _____ - (municipal name). If any amount of the guarantee remains after said costs

are satisfied, the balance of the guarantee shall be released and returned to the Permit holder.

8) The Permit may be extended for a period not to exceed one (1) year. The extension must be requested, in writing by the permit holder before the expiration of the initial Permit period. Administrative staff of the municipality may approve a permit extension provided there are no deviations from the original Access Permit present on the site or planned, and there are no violations of applicable ordinances. If there is any deviation or cause for question, the Administrative staff of the Municipality shall consult a representative of the Saginaw County Road commission for input.

9) Reissuance of an Access Permit that has expired requires a new Access Application form to be filled out and processed independently of previous action.

10) The permittee shall assume all responsibility for all maintenance of such driveway approaches from the right-of-way line to the edge of the traveled roadway.

11) Where a permit has been granted for entrances to a parking facility, said facility shall not be altered or the plan of operation changed until a revised plan has been submitted and approved as specified in this section.

12) Application for a permit to construct or reconstruct any driveway entrance and approach to a site shall also cover the reconstruction or closing of all nonconforming or unused entrances and approaches to the same site at the expense of the property owner.

13) When a building permit is sought for the reconstruction or remodeling of an existing site or a zoning or occupancy certificate is sought for use or change of use for any land, buildings, or structures, all of the existing, as well as proposed driveway approaches and parking facilities shall comply, or be made to comply, with all design standards as set forth in this ordinance prior to the issuance of a zoning or occupancy certificate.

14) _____(municipal name) and the Saginaw County Road Commission acting jointly may require a performance bond or cash deposit in any sum not to exceed $5,000 for each such approach or entrance to insure compliance with all of the terms of the permit. Such bond shall terminate and deposit be returned to the permittee when the terms of the permit have been met or when the permit is cancelled or terminated.

Section 7. DRIVEWAY SPACING

Driveway spacing will be determined as a function of arterial road operating speeds. Spacing will be determined according to the following schedule:

Table 1 Driveway Spacing	
Posted Road Speed	**Minimum Spacing**
25 mph	105 feet
30 mph	125 feet
35 mph	150 feet
40 mph	185 feet
45 mph	230 feet
50 mph	275 feet

(Standards are derived from the American Association of State Highway Transportation officials, Geometric Design of Highways and Streets, Table of Stopping Sight Distance.)

These spacings are based on average vehicle acceleration and deceleration rates and are considered necessary to maintain safe stopping distances and traffic operation. Spacing will be measured from the midpoint of each driveway. In the event that a particular parcel or parcels lack sufficient arterial frontage to maintain adequate spacing the land owner(s) have the following options.

1) They can seek a variance from the Zoning Board of Appeals from minimum spacing, but in no case should the variance be greater than the next lowest classification on *Table 7*. For example, on a 40 mph arterial requiring a 185' spacing, the distance may be reduced to no less than 150' which is the standard for a 35 mph facility.

2) The adjacent land owners may agree to establish a common driveway. In such case the driveway midpoint should be the property line between the two parcels. The driveway must meet standard specifications, and the estimated driveway volume will be the sum of the trip generation rate of both land uses in question. A joint easement agreement must be entered into prior to an access permit being granted.

Section 8. NUMBER OF DRIVEWAYS PER PARCEL

1) A maximum of one (1) driveway opening may be permitted to a particular site from Tittabawassee Road *and* one abutting street. Wherever feasible, access must be obtained from an abutting street.

2) When in the opinion of the _____(municipal name) or road authority's traffic engineer, and in the views of the permittee, it is in the

interest of good traffic operation, the Board may permit: One (1) additional driveway entrance along a continuous site frontage in excess of 300 feet, or two (2) additional driveway entrances along a continuous site frontage of in excess of 600 feet.

3) Where a dual service driveway, as depicted in *Figure 7*, is used it will be considered, for purposes of this section, to be only one direct access driveway.

4) In the case of dual one-way driveways, one (1) pair may be used per 250' of frontage. Only one (1) pair of one-way drives may be used per street frontage.

Section 9. <u>DESIGN CRITERIA</u>

The design features described and illustrated in this section shall be used by the applicant in dimensioning a proposed driveway or driveway system or plans accompanying the driveway permit application. *Figure 1* depicts the standard minimum driveway design. Every driveway constructed along and within a public right-of-way must at least meet the listed design criteria.

If projected driveway traffic volumes exceed 750/vehicles per day, for all traffic using the driveway, a departure from the standard design may be required. _____(municipal name), in conjunction with the Saginaw County Road Commission, may specify a driveway system which will accommodate vehicle movements normally expected without creating undue congestion or hazard on the road.

The applicant may also request a particular alternative design as part of the site plan submitted accompanying the driveway application permit.

1) The following figures (1 through 9) and tables (2 through 5) depict driveway standards and reasonable working ranges for each standard.

Figure 1 Standard Two-Way Driveway Permitted By Right

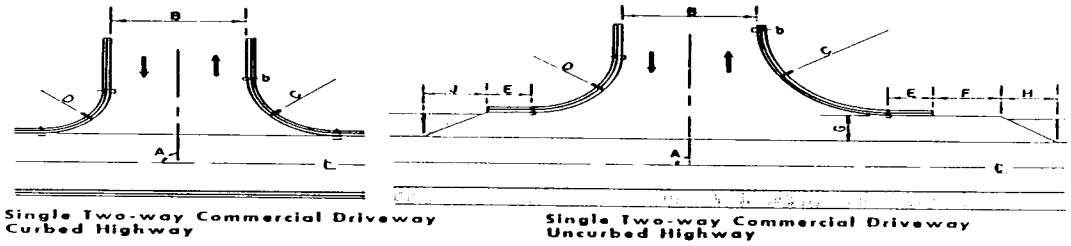

Table 2 Two-Way Drive Standards For Design					
Design Features		**Curbed Road**		**Uncurbed Road**	
		Standard	**Range**	**Standard**	**Range**
Intersecting Angle	A	90 deg	80-100 deg	90 deg	80-100 deg
Driveway Width	B	24 feet	20-36 feet	24 feet	20-36 feet
Entering Radius	C	20 feet	15-35 feet	25 feet	15-35 feet
Exiting Radius	D	15 feet	15-35 feet	20 feet	15-35 feet

The standard shall be used unless the Zoning Administrator in consultation with the Saginaw County Road Commission determines that another dimension within the range is more suitable for a particular site or special condition and is approved by the appropriate road authority and municipality.

2) Right turn lanes and tapers will be required when:

   a) expected right turn ingress movements meet or exceed 50/hour during a typical weekday peak traffic period.
   b) when driveway volumes are expected to meet or exceed 1,000 vehicles per day.
   c) when the Saginaw County Road Commission or the _____(municipal name) Engineer can document, through traffic analysis, that such treatment is necessary to avoid congestion and/or unsafe conditions on the public thoroughfare.

3) Center left turn lanes in conjunction with tapers will be required when:

   a) existing traffic volume or traffic generated by any new development or change to an existing development causes any bidirectional hourly volume to exceed 825 vehicles for one half mile east or west of the proposed access point. The required storage length for left turn lanes shall be according to the Federal Highway Administration's standards for left turn storage lanes, available in the Saginaw County Planning Office.

A right-turn lane shall be preceded by a taper. The design feature dimensions of a right turn lane and taper shall conform to those given in Figure 2 and Table 2.

Figure 2 Right-Turn Lane and Tapers (Entering Tapers)

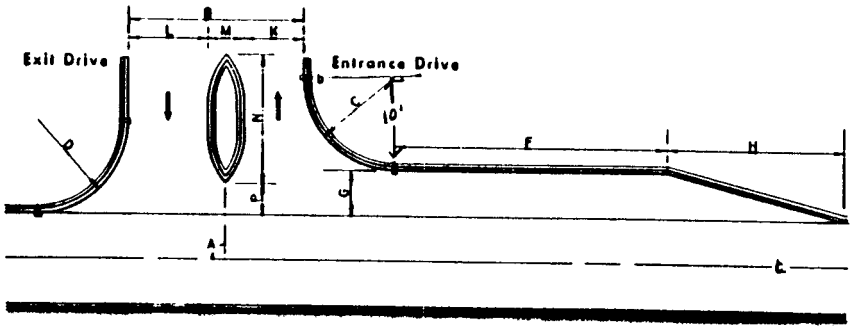

Figure 3 Right-Turn Lane and Tapers (Exiting Tapers)

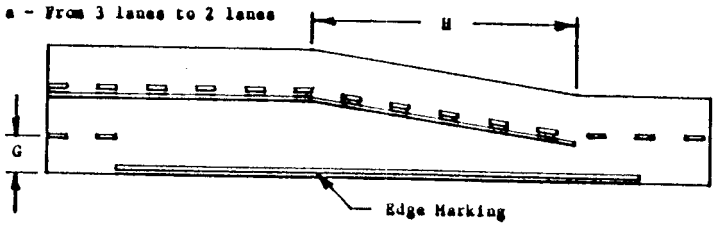

Table 3 Right Turn Lane and Tapers Standards for Design					
Design Features		**Curbed Road**		**Uncurbed Road**	
		Standard	**Range**	**Standard**	**Range**
Curb Ending	b	N/A	N/A	10 feet	no range
Right-turn Lane Length	F	length of lane=	width of lane X	speed	
Right-turn Lane Width	G	12 feet	10-15 feet	12 feet	10-15 feet
Entering Tapers	H	150 feet*	50-150 feet	150 feet	50-150 feet
Exiting Tapers	H	150 feet*	50-150 feet	150 feet	50-150 feet
Exiting Radius	D	N/A	N/A	50 feet	50-150 feet

*If a right-turn lane is used, the Entering or Exiting Taper standard shall be 50 ft. Without a right-turn lane, the Entering or Exiting Taper standard shall be 150 ft.

This standard shall be used unless the Zoning Administrator in consultation with the traffic engineer determines that another dimension within the range is suitable for a particular site or special condition.

4) Driveway Profile

Driveway profiles shall be determined using the following criteria:

a) The grade of a two-way, one-way or divided commercial driveway shall not exceed 1.5% for a minimum distance of 25 feet from the edge of the pavement. Beyond this distance the grade shall not exceed 8%. *Figure 4*.

b) If the road is curbed and if the sidewalk is ten (10) feet or less from the edge of the pavement, the grade of a driveway shall be the grade required to meet the sidewalk elevation. If that grade would exceed the maximums specified in paragraph (1), the sidewalk shall be either tilted or inclined.

c) If the road is uncurbed, the grade of the driveway between the road edge of pavement and the edge of the shoulder shall conform to the slope of the shoulder to the edge of the driveway approach. From that point the dimensions specified in Section 2 will apply.

d) For a driveway on an upgrade towards the road, a grade of 1.5% for a distance of 100 feet from the edge of the pavement is required. Beyond this distance, the grade shall not exceed 40% and the difference in grades where there is a change of grade shall not exceed 3%.

e) Vertical curves with a minimum length of 15 feet shall be provided at a change of grade of 4% or more.

f) If the sidewalk elevation has to be adjusted to meet the driveway, the sidewalk shall be inclined at a rate not to exceed (1) foot vertical for every 24 feet horizontal.

5) Drainage

a) A driveway shall be constructed so that it does not adversely affect the road drainage. The drainage and the stability of the road subgrade shall not be altered by the driveway construction or roadside development.

b) Drainage from adjacent parking or storage areas on private property in excess of existing drainage shall not be discharged into the road drainage system.

6) Surfacing and curbing along curbed roads

A driveway shall be paved and curbed to either the right-of-way line or to the point of curvature between the driveway edge and the larger radius, point b) in *Figure 1*, as determined by the engineer.

Figure 4 Standard Profile Design

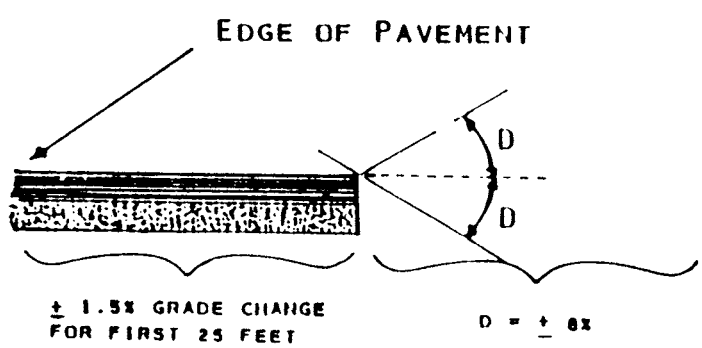

7) Surfacing and curbing along uncurbed roads

A driveway shall be paved and curbed to either the right-of-way line or to the point of curvature between the driveway edge and the larger radius, point b) in *Figure 2*. The curb ending adjacent to the driveway shall be located at least 13.5 feet from and parallel to the edge of the pavement.

8) Surface materials and thickness

The surface of a paved driveway, excluding right-turn lanes shall be concrete, bituminous or equivalent surfacing material. The thickness of the surface and the base to be used shall be sufficient to provide the bearing capacity needed to carry the proposed traffic loads. A 2 1/2 inch, 250 pounds per square yard, bituminous mix on 8 inches of compacted gravel, 8 inches of nonreinforced concrete or equivalent surfacing material that meets current MDOT Standard Specifications for Construction is acceptable for normal driveway traffic loads over stable soil. These specifications are minimum requirements and apply to the driveway only.

9) Surfacing of Right-turn lanes-and tapers

a) The pavement of a right-turn lane and accompanying tapers shall match the road pavement, unless the authority permits the use of an equivalent pavement.

b) The cross slope of a right-turn lane and tapers shall be:

(1) A continuation of the cross slope of the roadway if the road is curbed.

(2) Equal to the shoulder slope if the road is uncurbed.

10) Shoulders

a) The surface of the shoulder adjacent to a right-turn lane and tapers shall be of the same material as the shoulder and conform to the current Michigan Department of Transportation Standard Specifications for Roadway Construction.

b) If the distance between 2 paved commercial driveways serving the same property is less than 100 feet, measured between adjacent ends of the curb endings, the applicant shall pave the shoulder between the driveways.

11) Driveway curb details

The driveway curb shall either match the existing curb or shall conform to the current standards for curb and gutter.

Section 10. CORNER CLEARANCE

Intersecting streets and direct access driveways shall be spaced according to the same regulations for distances between direct access driveways, as listed in Section 3, with the exception of the following. Direct access driveways must be at least 400 feet from the intersections of M-84 (Bay Road) and Mackinaw Road.

Section 11. CONSISTENCY WITH COMPREHENSIVE PLAN

In some cases, on a particularly congested arterial, the Municipal plan may call for specific innovative treatment of access control. Examples may include service drives, continuous right turn lanes, access off and collector streets, commercial parks, and combined, coordinated parking/access systems. In such cases, any innovative design meeting the spirit and intent of these regulations, and performance standards, may be considered through site plan review.

Section 12. TEMPORARY DRIVEWAY PERMITS

Temporary driveway permits are intended to allow existing driveways and new driveways, necessary to access sites remote from adjacent access, to remain in use until such time as the conditions specified on the permit are met.

1) A temporary permit may be granted for;

   a) Existing driveways that access existing development or are necessary to service farm fields and are only used for that purpose. Existing driveways are legal nonconforming driveways and may exist without a temporary permit under the conditions specified in section 13.2, Nonconforming driveways.

   b) New driveways necessary to access new development where the new development is remote from adjacent access drives that shared access is not feasible at the time of development.

2) Conditions upon which the Temporary Permit will expire may include:

a) Adjacent development within 115 feet of the site where the temporary driveway is located is planned. At this time, joint access provisions with the adjacent property owner must take place.

b) The use of the site for which the temporary permit was granted has ceased for six months or more or the use of the site or the driveway has changed such that the use of the driveway is increased to any degree.

Section 13. NONCONFORMING DRIVEWAYS

1) Driveways that do not conform to the regulations in this Ordinance, and were constructed before the adoption of this Ordinance, shall be considered legal nonconforming driveways.

Existing driveways granted a temporary permit are legal nonconforming driveways until such time as the temporary permit expires.

2) Loss of legal nonconforming status results when a nonconforming driveway ceases to be used for its intended purpose, as shown on the approved site plan, for a period of six (6) months or more. Any reuse of the driveway may only take place after the driveway conforms to all aspects of this Ordinance.

3) Legal nonconforming driveways may remain in use until such time as the use of the driveway or property is changed or expanded in such a way that impact the use of the driveway. At this time, the driveway must be made to conform to all aspects of the Ordinance.

4) Driveways that do not conform to the regulations in this Ordinance and have been constructed after adoption of this Ordinance, shall be considered illegal nonconforming driveways.

5) Illegal nonconformities must be cited as violations of this Ordinance, made to cease use of the driveway and correct any nonconforming aspects of the driveway. Driveways constructed in illegal locations must be closed and all evidence of the driveway removed from the right-of-way and site on which it is located.

6) Nothing in this Ordinance shall prohibit the repair, improvement, or modernization of lawful nonconforming driveways.

Section 14. VARIANCES FOR DRIVEWAY DESIGNS

The applicant may apply for a variance from the standard driveway designs, under the following conditions:

1) When driveway volumes are expected to meet or exceed 1,000 vehicles per day.

2) When expected turning ingress or egress movements meet or exceed 50 per hour during a typical weekday peak traffic period as determined by a traffic study or generally accepted trip generation table, approved by the Planning Commission, such as the Institute of Transportation Engineers Trip Generation Manual.

3) When in the judgment of the Saginaw County Road Commission or municipal traffic engineer, specific site conditions require alternative design treatments to provide for safe and efficient driveway operation.

4) When a joint or coordinated access-parking system is being used. When two adjacent property owners agree to combine access points, the municipality may grant an incentive bonus. The total road frontage normally required will each be reduced by 10% for both land owners. (Site circulation and safety standards will still be enforced).

5) When a permittee seeks a variance for an innovative method for access design or operations.

Variances should be granted only where practical difficulties require an innovative access design or dimensional change that is consistent with the intent of the ordinance. Variances may not be granted for financial hardship or in any instance where the intent of the ordinance can be met by abiding by the standards in this document.

The _____ (municipal name) Board of Appeals and one representative of the Saginaw County Road Commission shall hear and decide all requests for a variance, interpretation or administrative review of access control regulations.

Section 15 SAMPLE DRIVEWAY DESIGN ALLOWED BY VARIANCE

Figure 5 Dual Service Drive

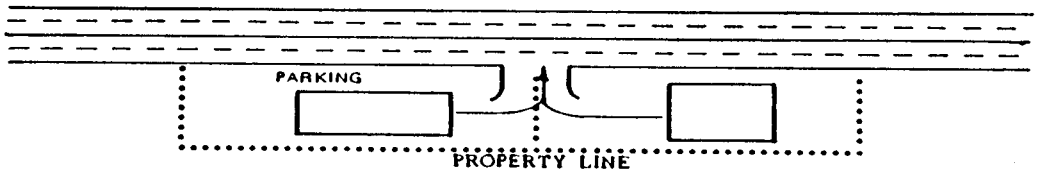

SHARED ACCESS ON PROPERTY LINE

Table Four Design Standards Dual Service Drive					
Design Features		**Curbed Road**		**Uncurbed Road**	
		Standard	**Range**	**Standard**	**Range**
Intersecting Angle	AR	60 deg	45-90 deg	60 deg	45-90 deg
Entering Radius	CR	20 feet	15-35 feet	25 feet	15-35 feet
Exiting Radius	DR	10 feet	5-25 feet	5 feet	5-25 feet
Intersecting Angle	AL	120 deg	90-135 deg	120 deg	90-135 deg
Entering Radius	CL	10 feet	5-25 feet	5 feet	5-15 feet
Exiting Radius	DL	15 feet	5-50 feet	20 feet	5-50 feet
Driveway Width	B	24 feet	20-36 feet	24 feet	12-50 feet 20-36 feet
Distance Between Driveways	S	20 feet	10-150 feet	20 feet	10-150 feet

The standard shall be used unless the Zoning Administrator in consultation with the Saginaw County Road Commission and _____ (municipal name) Planning Commission determines that another dimension within the range is more suitable for a particular site or special condition.

Figure 6 Sample Coordinated Access Parking System

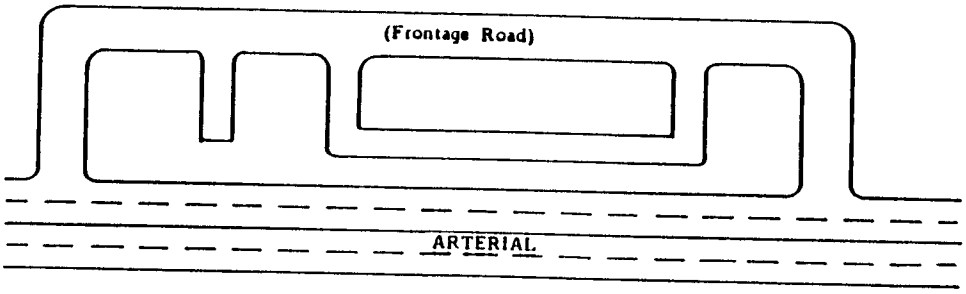

INDUSTRIAL PARK WITH FRONTAGE ROAD

Figure 7
Sample Service Drives
***Design standards based upon site plan review**
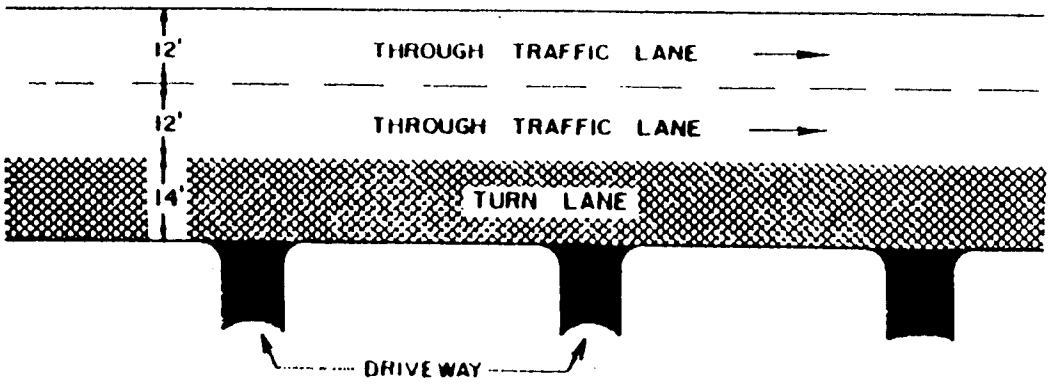
Figure 8
Continuous Right Lane